Spare parts list

Forward plate

	Valid from serial number
LX 90 Honda	19005001
LX 90 Honda	BGF0000001

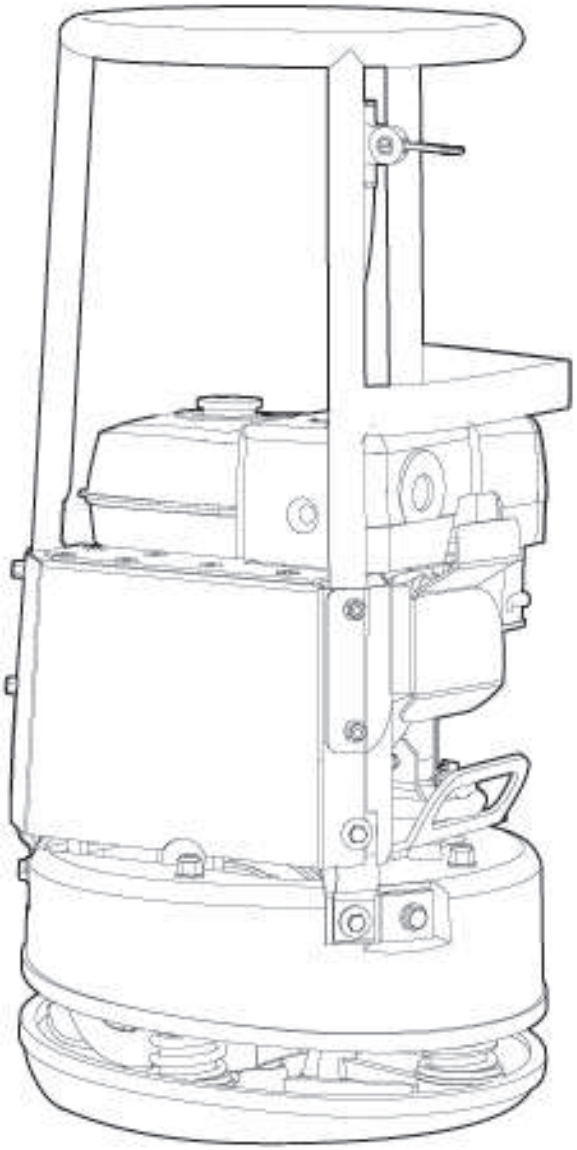

© 2012 Atlas Copco Construction Tools AB | No. 9800 1130 01a | 2012-09-18

Atlas Copco

Contents

General information 5

Spare parts list 6
- **Ground plate, engine plate and handle** 6
- **Eccentric element** 8
- **Engine installation** 10
- **Centrifugal clutch** 12
- **Throttle control** 14
- **Labels** 16

Kits 18
- **One year service kit, Honda** 18
- **Shock absorber repair kit** 18

© 2012 Atlas Copco Construction Tools AB | No. 9800 1130 01a | 2012-09-18

General information

This spare parts list applies to the following:

Part number	Description
3382 0000 53	Forward plate LX 90 Honda

Use only authorized parts. Any damage or malfunction caused by the use of unauthorized parts is not covered by Warranty or Product Liability.
Any unauthorized use or copying of the contents or any part thereof is prohibited. This applies in particular to trademarks, model denominations, part numbers, and drawings.

Instructions for use
This spare parts list contains no safety regulations and is merely intended to assist in the ordering of spare parts.
For information about operating, servicing, or repairing, the relevant Safety and operating instructions must be consulted at all costs.
Please observe the safety instructions listed in the relevant Safety and operating instructions!

© 2012 Atlas Copco Construction Tools AB | No. 9800 1130 01a | 2012-09-18

Spare parts list

Ground plate, engine plate and handle

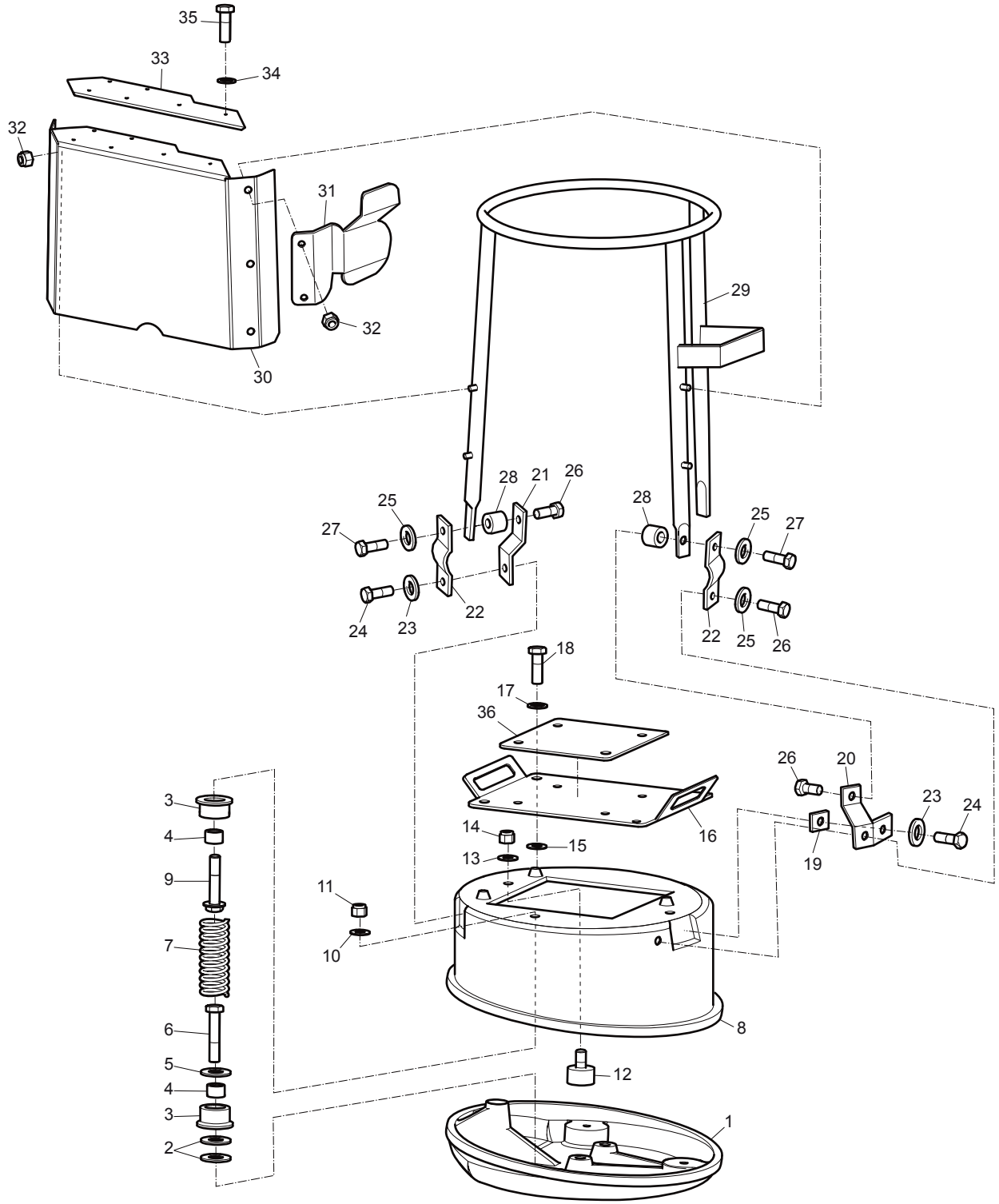

© 2012 Atlas Copco Construction Tools AB | No. 9800 1130 01a | 2012-09-18

No.	Description	Remark	Quantity	Part number
1	Ground plate		1	4700 3879 13
2	Washer		5	3382 0106 02
3	Bushing		6	3382 0106 00
4	Spacer sleeve		6	3382 0106 01
5	Washer	13 x 45 x 4 mm 0.51 x 1.77 x 0.16 A2K	3	-
6	Screw	M12 x 60 mm 8.8 A3K	3	-
7	Spring		3	4700 2826 78
8	Engine base		1	3382 0105 77
9	Screw		3	3382 0106 04
10	Washer	13 x 24 x 2 mm 0.51 x 0.98 x 0.08 in. 300 HV	3	-
11	Nut	M12	3	-
12	Shock absorber		1	3382 0105 98
13	Washer	8.4 x 16 x 1.5 mm 0.33 x 0.63 x 0.06 in. 300 HV	1	-
14	Nut	M8	1	-
15	Washer	10.5 x 28 x 6 mm 0.41 x 1.10 x 0.24 in. 300 HV	3	-
16	Engine plate		1	4700 2822 95
17	Washer	10.5 x 22 x 2 mm 0.41 x 0.87 x 0.08 in. 300 HV	3	-
18	Screw	M10 x 25 mm 8.8 A3K	1	-
19	Washer	14 x 40 x 4 mm 0.55 x 1.57 x 0.16	1	-
20	Bracket		1	3382 0106 03
21	Bracket		2	3382 0105 97
22	Strap		3	3382 0105 78
23	Washer	10.5 x 22 x 4 mm 0.41 x 0.87 x 0.16 in. 300 HV	3	-
24	Screw	M10 x 30 mm 8.8 A3K	3	-
25	Washer	8.4 x 26 x 4 mm 0.33 x 1.02 x 0.16 in. 300 HV	4	-
26	Screw	M8 x 12 mm 8.8 A2K	4	-
27	Screw	M8 x 20 mm 8.8 A2K	3	-
28	Shock absorber		3	4700 3775 57
29	Handle		1	3382 0105 75
30	Belt guard		1	3382 0105 76
31	Thermal guard		1	7400 2825 85
32	Nut	M8 x 1.25 mm A2K	4	-
33	Rubber cloth		1	3382 0106 07
34	Washer	5 x 19 x 1 mm 0.20 x 0.78 x 0.04	6	-
35	Blind rivet		6	4700 9048 56
36	Shock absorber		1	3382 0106 05

© 2012 Atlas Copco Construction Tools AB | No. 9800 1130 01a | 2012-09-18

Eccentric element

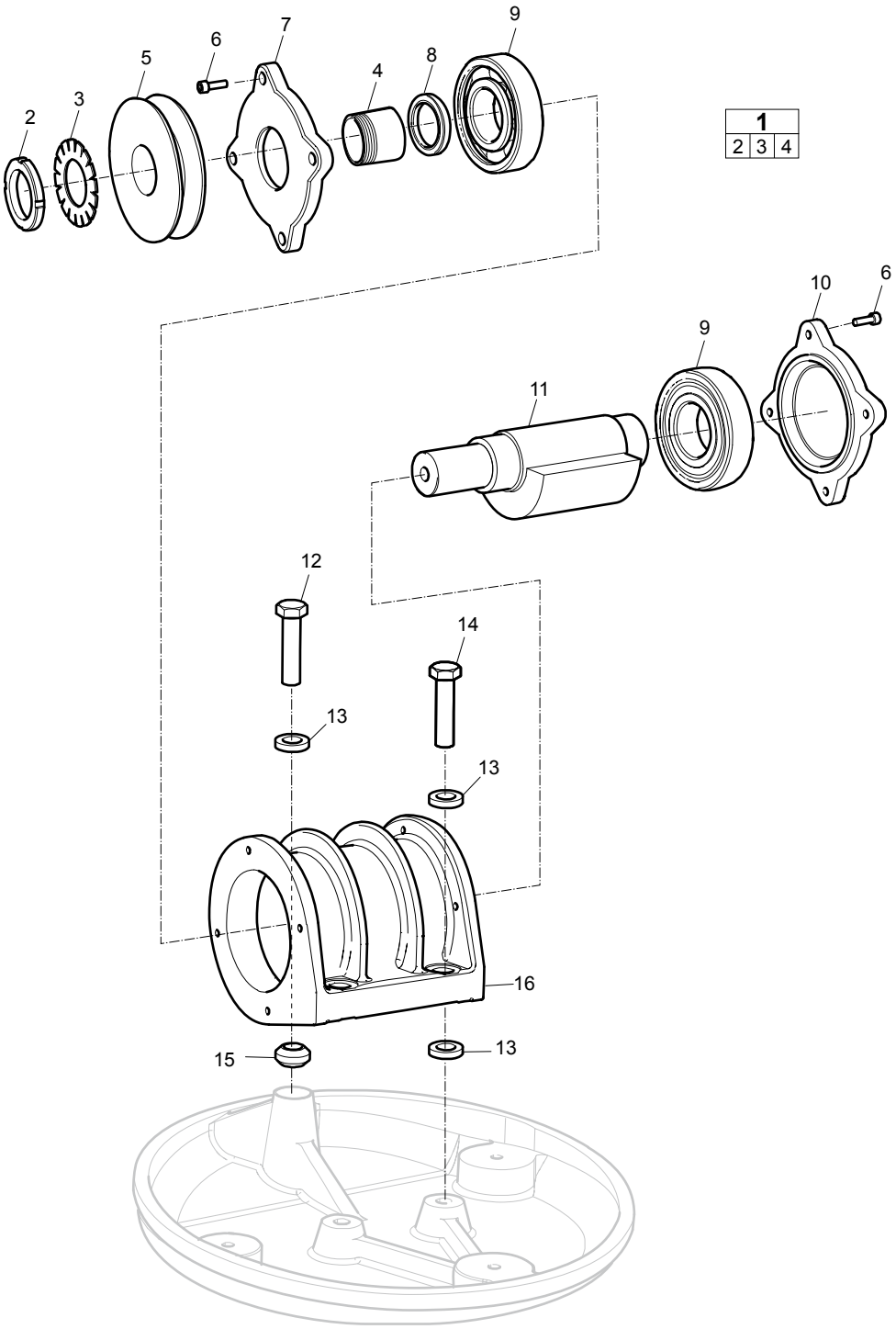

© 2012 Atlas Copco Construction Tools AB | No. 9800 1130 01a | 2012-09-18

No.	Description	Remark	Quantity	Part number
1(2-4)	**Clamping sleeve, complete**		1	3382 0105 88
2	Shaft nut		1	-
3	Lock washer		1	-
4	Clamping sleeve		1	-
5	Pulley		1	3382 0105 94
6	Screw	M6 x 20 mm 8.8 A2K	8	-
7	Cover		1	3382 0105 92
8	Sealing ring		1	3382 0105 89
9	Ball bearing		2	3382 0105 87
10	Cover		1	3382 0105 91
11	Eccentric shaft		1	3382 0105 93
12	Screw	M16 x 75 mm 10.9 GEOMET®	1	4700 9479 43
13	Washer	17 x 30 x 6 mm 0.70 x 1.18 x 0.24 in. 300 HV	5	-
14	Screw	M16 x 65 mm 10.9 GEOMET®	2	4700 9476 99
15	Washer		1	3382 0105 99
16	Eccentric housing		1	3382 0105 90

GEOMET is a registered trademark of Nof Metal Coatings North America Inc.

© 2012 Atlas Copco Construction Tools AB | No. 9800 1130 01a | 2012-09-18

Engine installation

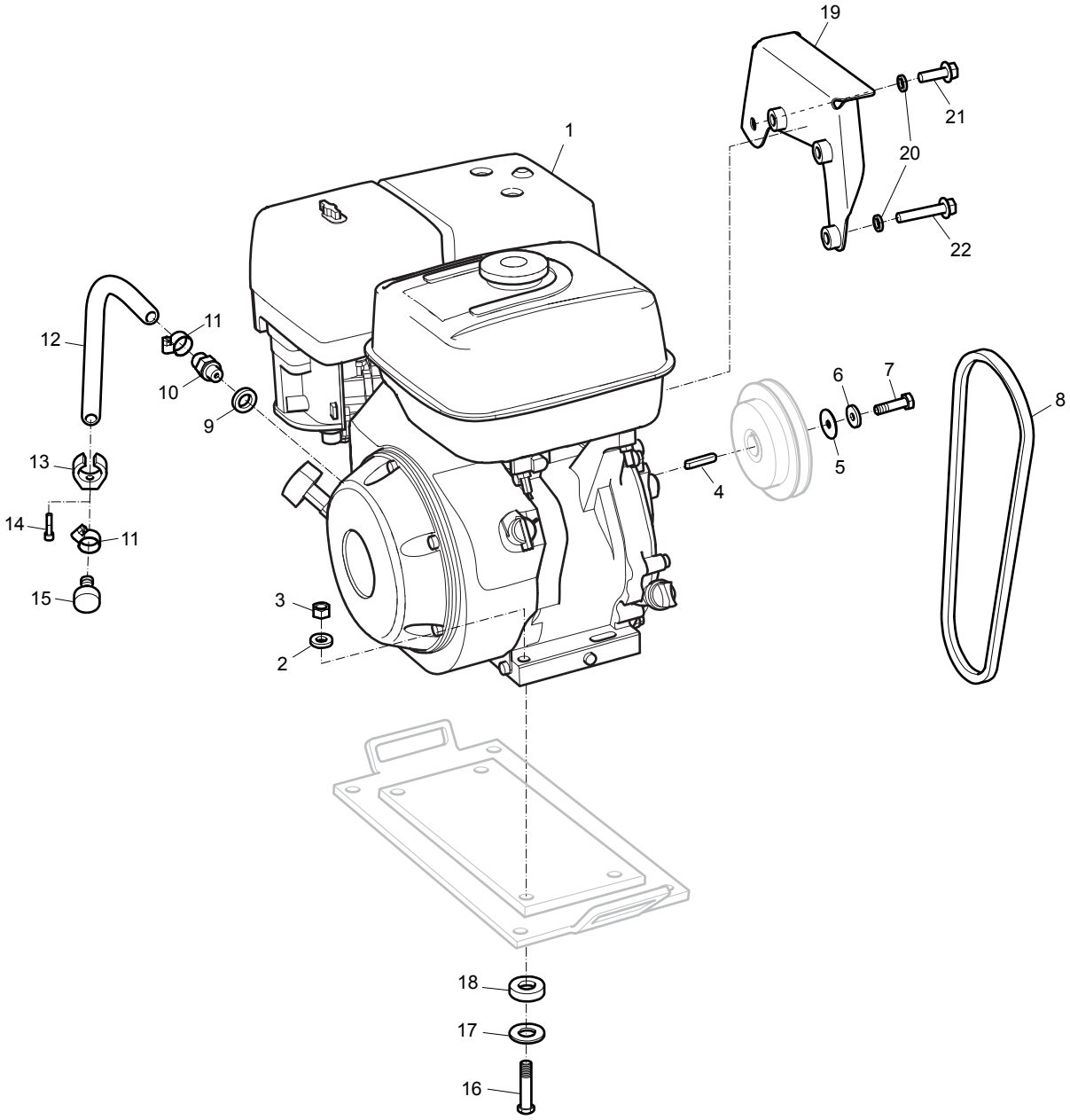

© 2012 Atlas Copco Construction Tools AB | No. 9800 1130 01a | 2012-09-18

No.	Description	Remark	Quantity	Part number
1	Engine	Honda GX160UT2 SXS4 SD	1	4700 2811 25
2	Washer	8.4 x 16 x 1.5 mm 0.33 x 0.63 x 0.06 in. 300 HV	4	-
3	Nut	M8	4	-
4	Key		1	-
5	Washer	21 x 36 x 3 mm 0.83 x 1.42 x 0.24 in. 300 HV	1	-
6	Washer	8.4 x 26 x 4 mm 0.33 x 1.02 x 0.16 in. 300 HV	1	-
7	Screw	M8 x 20 mm 8.8 A2K	1	-
8	V-belt		1	4700 2386 35
9	Washer	10 x 14 x 1 mm 0.39 x 0.55 x 0.04 in.	1	-
10	Hose connection		1	4812 0703 74
11	Clamp		2	4700 3130 01
12	Hose		1	3382 0101 86
13	RYW clip		1	4700 2812 34
14	Screw	M5 x 16 mm	1	-
15	Plug		1	3382 0101 80
16	Screw	M8 x 55 mm 8.8 A2K	4	-
17	Washer	9 x 35 x 2 mm 0.35 x 1.38 x 0.08 in. SR	4	-
18	Washer		4	3382 0106 06
19	Cover		1	4812 0702 94
20	Washer	8 x 13.5 mm 0.53 x 0.31 x in. NORD-LOCK®	7	-
21	Screw	M8 x 25 mm 8.8 A2K	1	-
22	Screw	M8 x 45 mm 8.8 A2K	3	-

NORD-LOCK is a registered trademark of Nord-Lock International AB.

© 2012 Atlas Copco Construction Tools AB | No. 9800 1130 01a | 2012-09-18

Centrifugal clutch

1													
2	3	4	5	6	7	8	9	10	11	12	13	14	

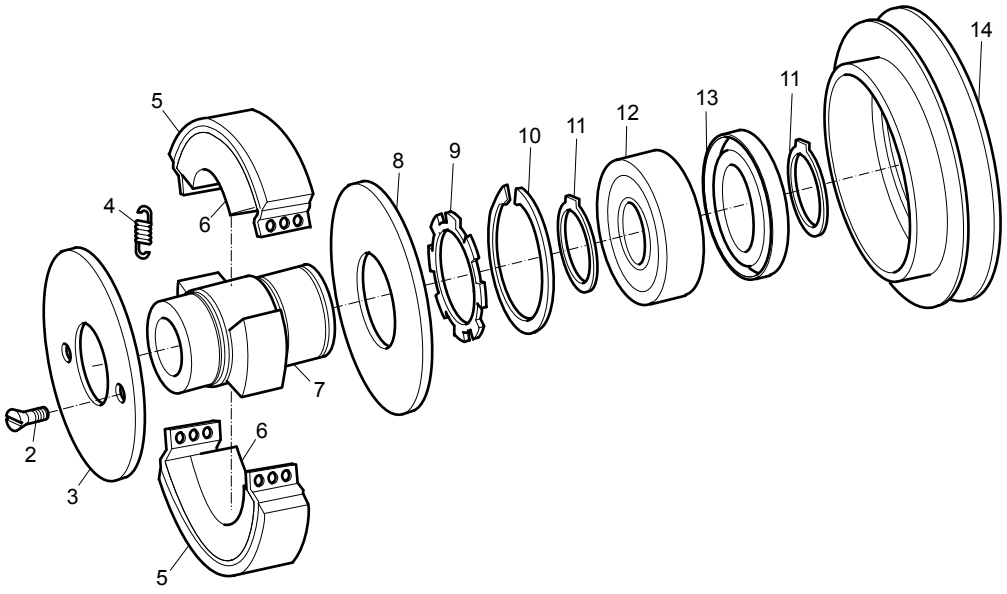

© 2012 Atlas Copco Construction Tools AB | No. 9800 1130 01a | 2012-09-18

No.	Description	Remark	Quantity	Part number
1(2-14)	**Centrifugal clutch, complete**		1	3382 0105 95
2	Screw		2	4700 5350 02
3	Cover		1	3382 0101 84
4	Spring		4	4700 9385 31
5	Clutch lining		2	4700 2386 06
6	Clutch weight		2	3382 0101 85
7	Hub		1	4700 2397 63
8	Cover		1	4700 2398 57
9	Retaining ring		1	4700 2395 39
10	Retaining ring		1	4700 9387 25
11	Snap ring		2	4700 9387 26
12	Ball bearing		1	4700 9387 24
13	Sealing ring		1	4700 1340 56
14	V-belt pulley		1	4700 9379 09

© 2012 Atlas Copco Construction Tools AB | No. 9800 1130 01a | 2012-09-18

Throttle control

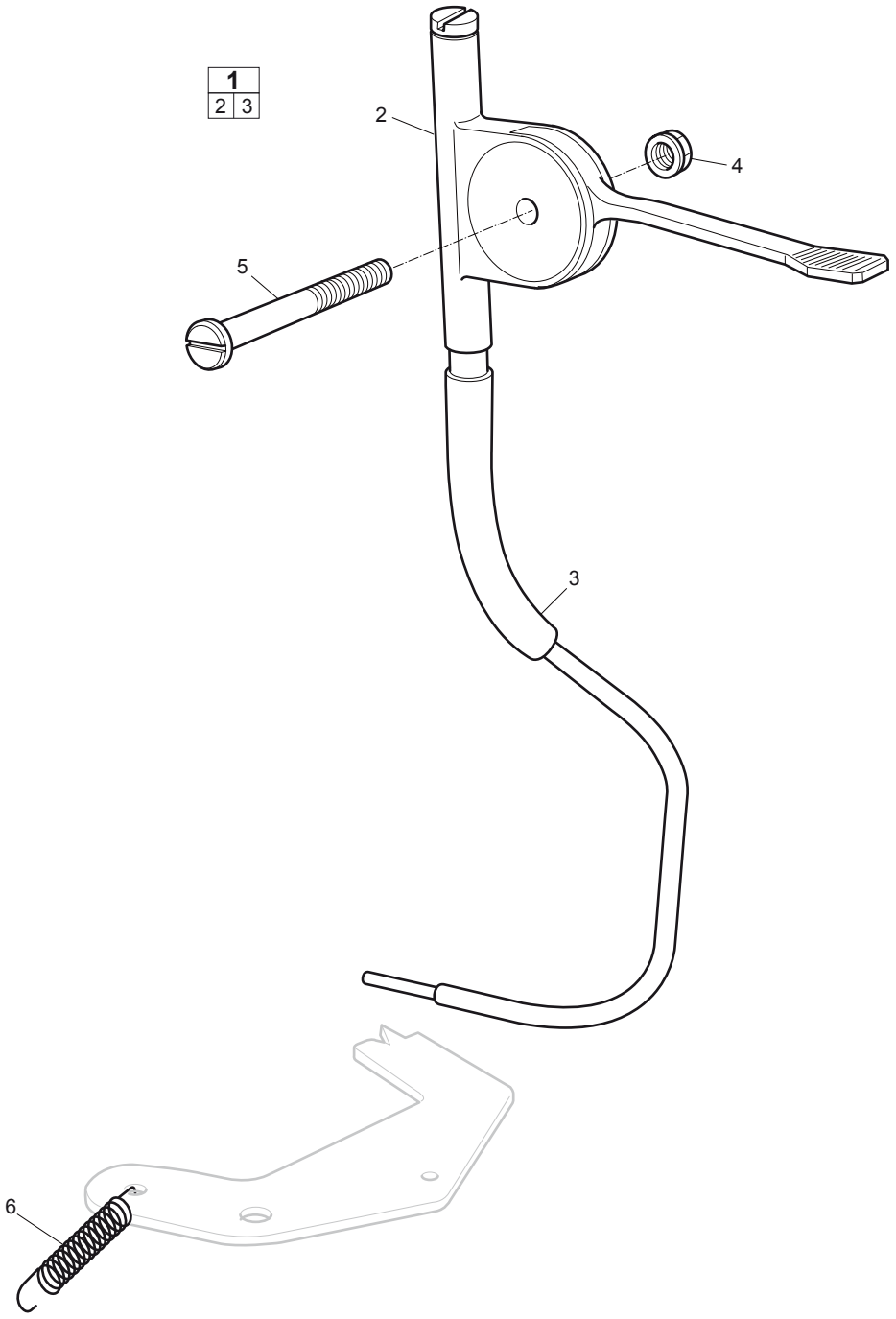

© 2012 Atlas Copco Construction Tools AB | No. 9800 1130 01a | 2012-09-18

No.	Description	Remark	Quantity	Part number
1(2-3)	**Throttle control**		1	4700 2822 97
2	Handle		1	-
3	Wire		1	-
4	Nut	M6	1	-
5	Screw	M6 x 55 mm 8.8 FZB	1	-
6	Spring		1	4700 2808 21

© 2012 Atlas Copco Construction Tools AB | No. 9800 1130 01a | 2012-09-18

Labels

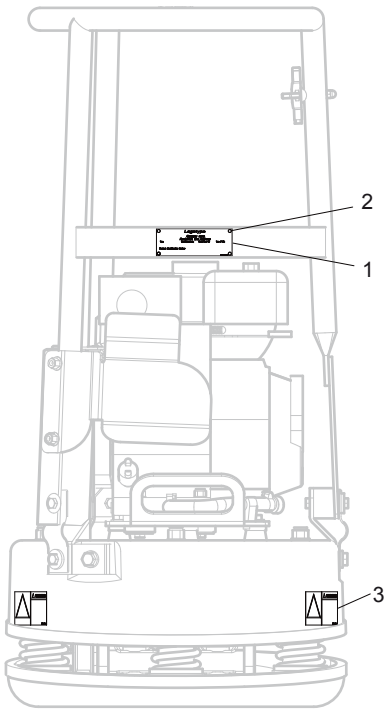

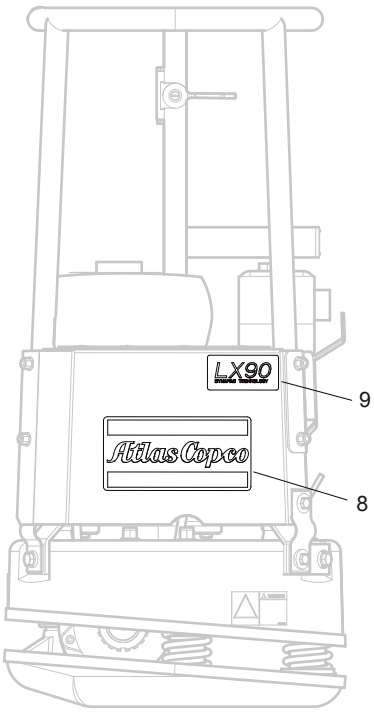

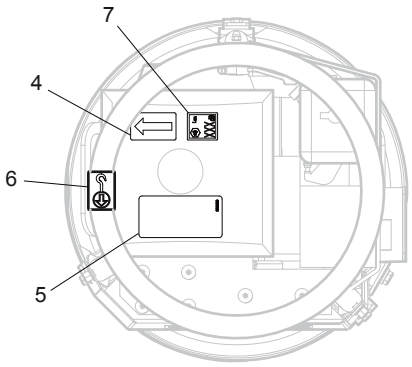

© 2012 Atlas Copco Construction Tools AB | No. 9800 1130 01a | 2012-09-18

No.	Description	Remark	Quantity	Part number
1	Data plate		1	-
2	Drive screw		4	-
3	Safety label	Crush zone	3	4700 9047 85
4	Label	Direction	1	4700 2822 96
5	Label	Petrol, ear protection, read instruction manual, crush zone and hot surface.	1	4700 3891 68
6	Label	Lift point	1	4700 3575 87
7	Label	Sound power level	1	4700 7912 92
8	Product label	"Atlas Copco"	1	3382 0100 22
9	Product label	"LX 90"	1	3382 0105 79

© 2012 Atlas Copco Construction Tools AB | No. 9800 1130 01a | 2012-09-18

Kits

One year service kit, Honda

One year service kit
Part number 3382 1000 44

Description	Remark	Quantity	Part number
Air filter		5	4700 2393 23
Gasket	For oil dipstick.	1	4700 2383 03
Starting rope		1	4700 2393 74
Spark plug		1	4700 9242 42
V-belt	See section "Engine installation".	1	4700 2386 35
Gasket	For valve cover.	1	4700 2383 01

Shock absorber repair kit

Description	Remark	Quantity	Part number
Shock absorber repair kit		1	3382 1000 45
Shock absorber	For engine plate. See section "Ground plate, engine plate and handle".	1	3382 0105 98
Shock absorber	For engine plate. See section "Engine plate".	3	4700 3775 57
Nut	M12 x 40 mm 8.8 A3K See section "Ground plate, engine plate and handle".	1	-
Screw	M8 x 12 mm 8.8 A2K See section "Ground plate, engine plate and handle".	2	-
Washer	8.4 x 26 x 4 mm 0.33 x 1.02 x 0.16 in. 300 HV See section "Ground plate, engine plate and handle".	2	-
Screw	8.4 x 16 x 1.5 mm 0.33 x 0.63 x 0.06 in. 300 HV See section "Ground plate, engine plate and handle".	2	-
Washer	8.4 x 16 x 1.5 mm 0.33 x 0.63 x 0.06 in. 300 HV See section "Ground plate, engine plate and handle".	1	-

© 2012 Atlas Copco Construction Tools AB | No. 9800 1130 01a | 2012-09-18

Any unauthorized use or copying of the contents or any part thereof is prohibited. This applies in particular to trademarks, model denominations, part numbers, and drawings.

© 2012 Atlas Copco Construction Tools AB | No. 9800 1130 01a | 2012-09-18

Atlas Copco

www.atlascopco.com