Husqvarna®

SPARE PARTS LIST

LIGHT COMPACTION

LF 100 L/LF 100 LAT, 967855101, 967855101, 967855102, 967855103, 967855104, 967896801, 2019-08

A **LF 100 L / LF 100 LAT**
GROUND PLATE INSTALLATION

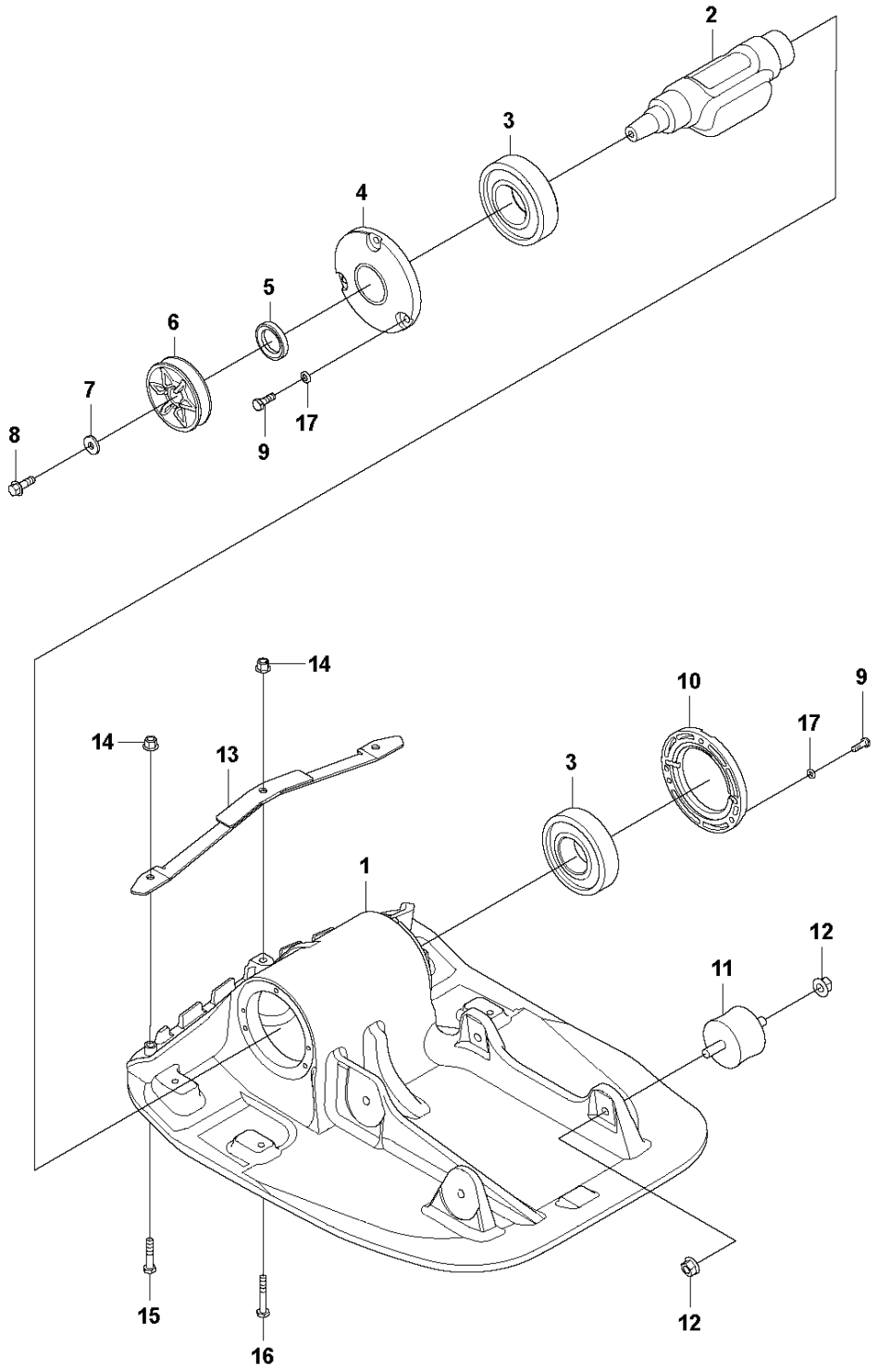

GROUND PLATE INSTALLATION LF 100 L/LF 100 LAT, 967855101, 967855101, 967855102, 967855103, 967855104, 967896801, 2019-08

Ref	Part No	Description	Remark	QTY KIT
1	594 65 09-01	PLATE		1
2	594 64 39-01	SHAFT		1
3	594 52 61-01	BALL BEARING		2
4	594 49 01-01	COVER		1
5	594 12 83-01	SEAL	Lip-type	1
6	594 48 67-01	PULLEY		1
7	594 12 34-01	WASHER	8.4 x 16 x 1.5 mm, 0.33 x 0.63 x 0.06 in. 300 HV	1
8	594 12 00-01	SCREW	M8 x 25 mm 8.8 A2K	1
9	595 03 32-01	SCREW	M6x16 8.8, A2K	6
10	594 49 02-01	COVER		1
11	594 34 19-01	ABSORBER		4
12	594 12 26-01	HEXAGON NUT	M10 x 1.5 mm GEOMET®	8
13	594 65 32-01	BAR	500 mm, 19.7 in.	1
14	594 12 30-01	LOCK NUT	M8 x 1.25 mm	3
15	595 03 35-01	SCREW	M08x40 8.8, A2K	2
16	595 28 71-01	SCREW	M08x50, 8.8, A2K	1
17	594 12 46-01	WASHER	nordlock NL6 M6 DIA 13.5	6

B LF 100 L / LF 100 LAT LIFTING HANDLE

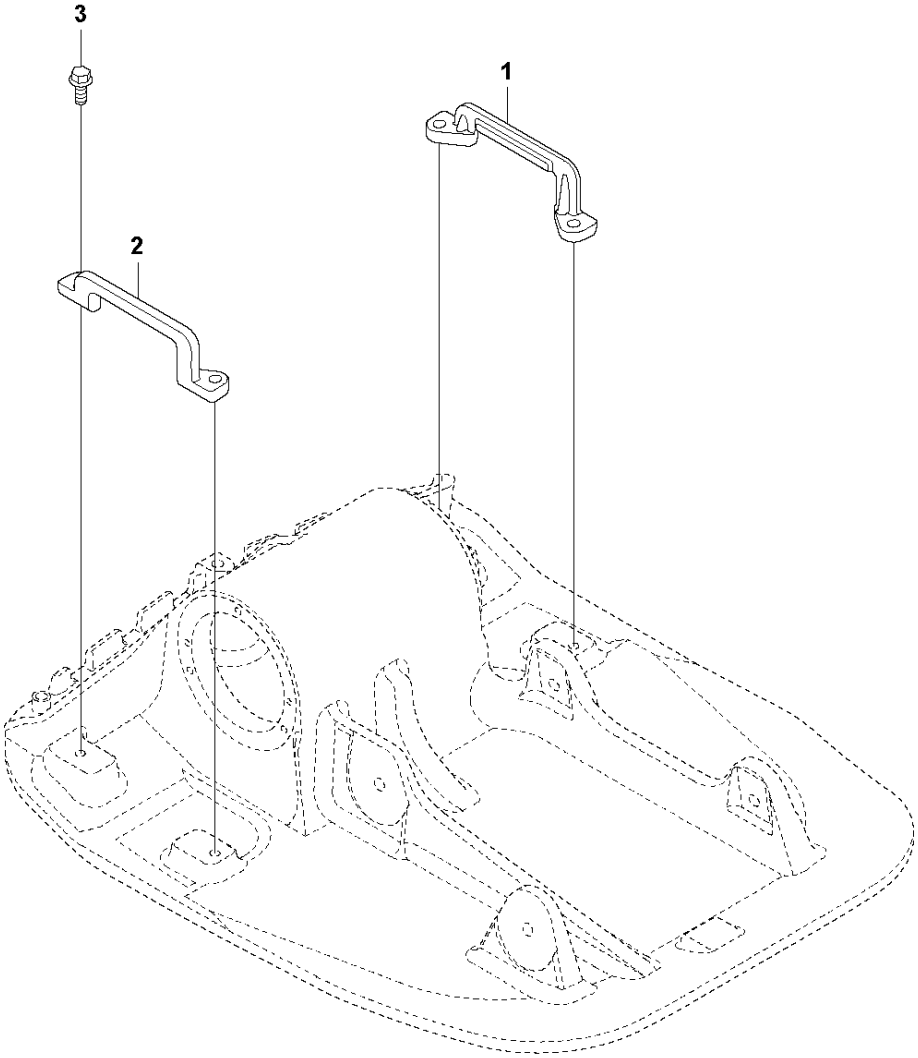

LIFTING HANDLE LF 100 L/LF 100 LAT, 967855101, 967855101, 967855102, 967855103, 967855104, 967896801, 2019-08

Ref	Part No	Description	Remark	QTY KIT
1	594 48 68-01	HANDLE	Right	1
2	594 48 69-01	HANDLE	Left	1
3	595 28 73-01	SCREW	M8x20 mm 8.8 A2K	4

C LF 100 L
ENGINE PLATE - HONDA

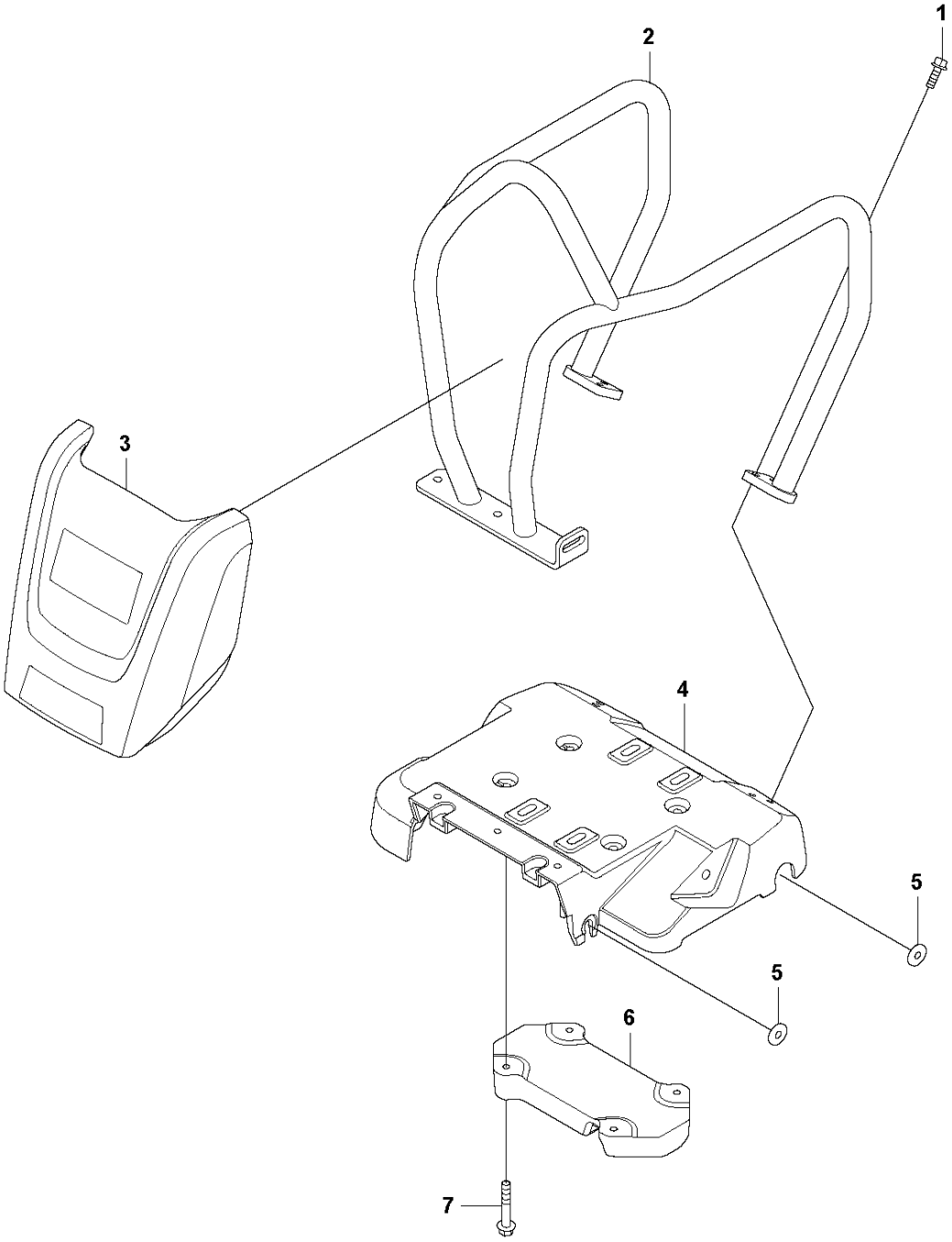

ENGINE PLATE - HONDA LF 100 L/LF 100 LAT, 967855101, 967855101, 967855102, 967855103, 967855104, 967896801, 2019-08

Ref	Part No	Description	Remark	QTY KIT
1	595 18 57-01	SCREW	M8x25mm 8.8 A2K	7
2	594 14 46-01	FRAME		1
3	594 95 80-01	COVER		1
4	594 14 54-01	ENGINE PLATE		1
5	594 52 64-01	WASHER	Square taper washer M10 22x22x4.6 dia.11 din 435	2
6	594 86 84-01	WEIGHT		1
7	594 49 91-01	SCREW	bolt with flange M8x50,M6SF,8.8,Ref.9002 8 8 50	4

D **LF 100 L**
ENGINE PLATE - HATZ

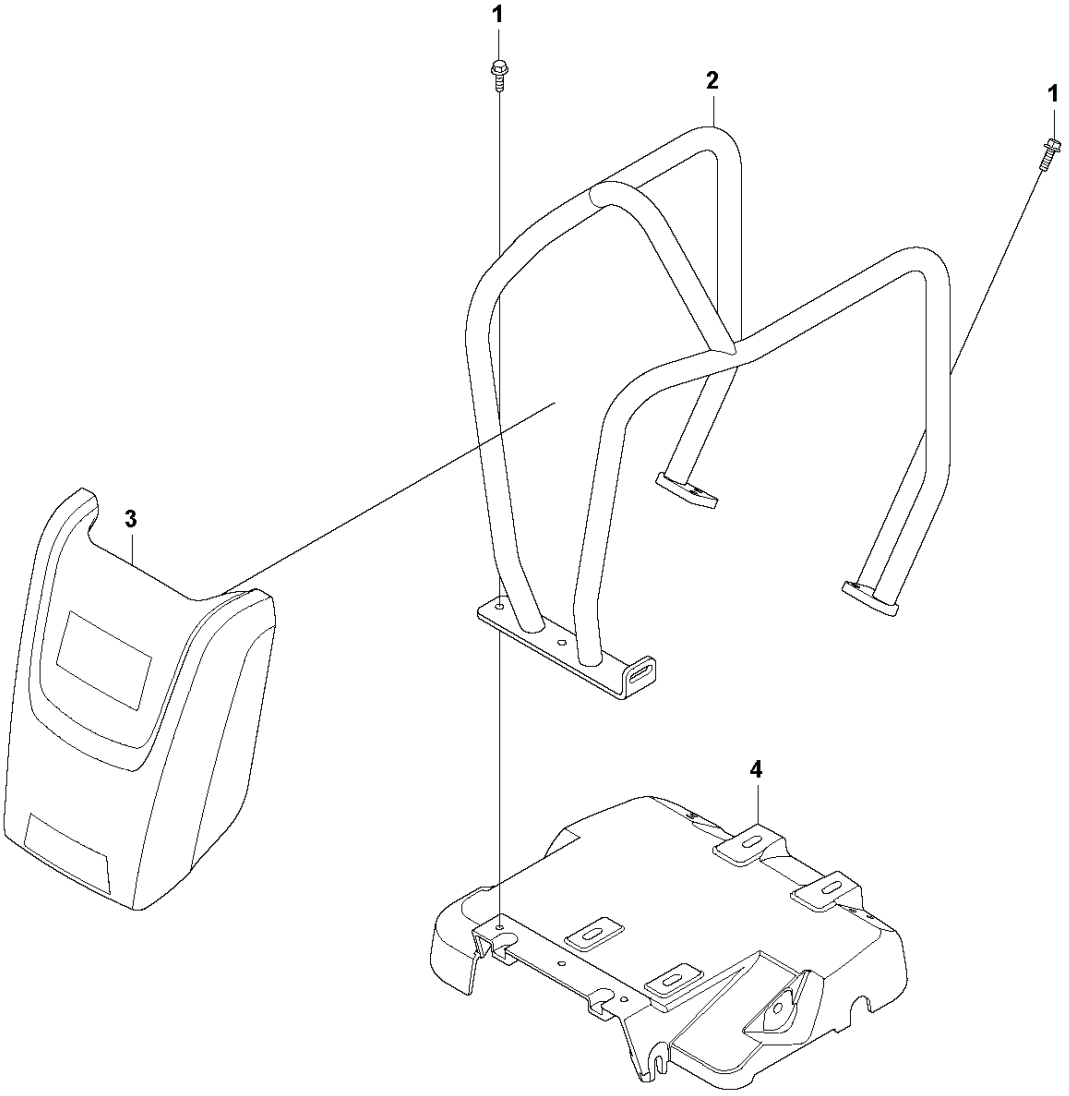

ENGINE PLATE - HATZ LF 100 L/LF 100 LAT, 967855101, 967855101, 967855102, 967855103, 967855104, 967896801, 2019-08

Ref	Part No	Description	Remark	QTY KIT
1	594 12 00-01	SCREW		7
2	594 14 47-01	FRAME		1
3	594 95 95-01	HOOD		1
4	594 14 55-01	ENGINE PLATE		1

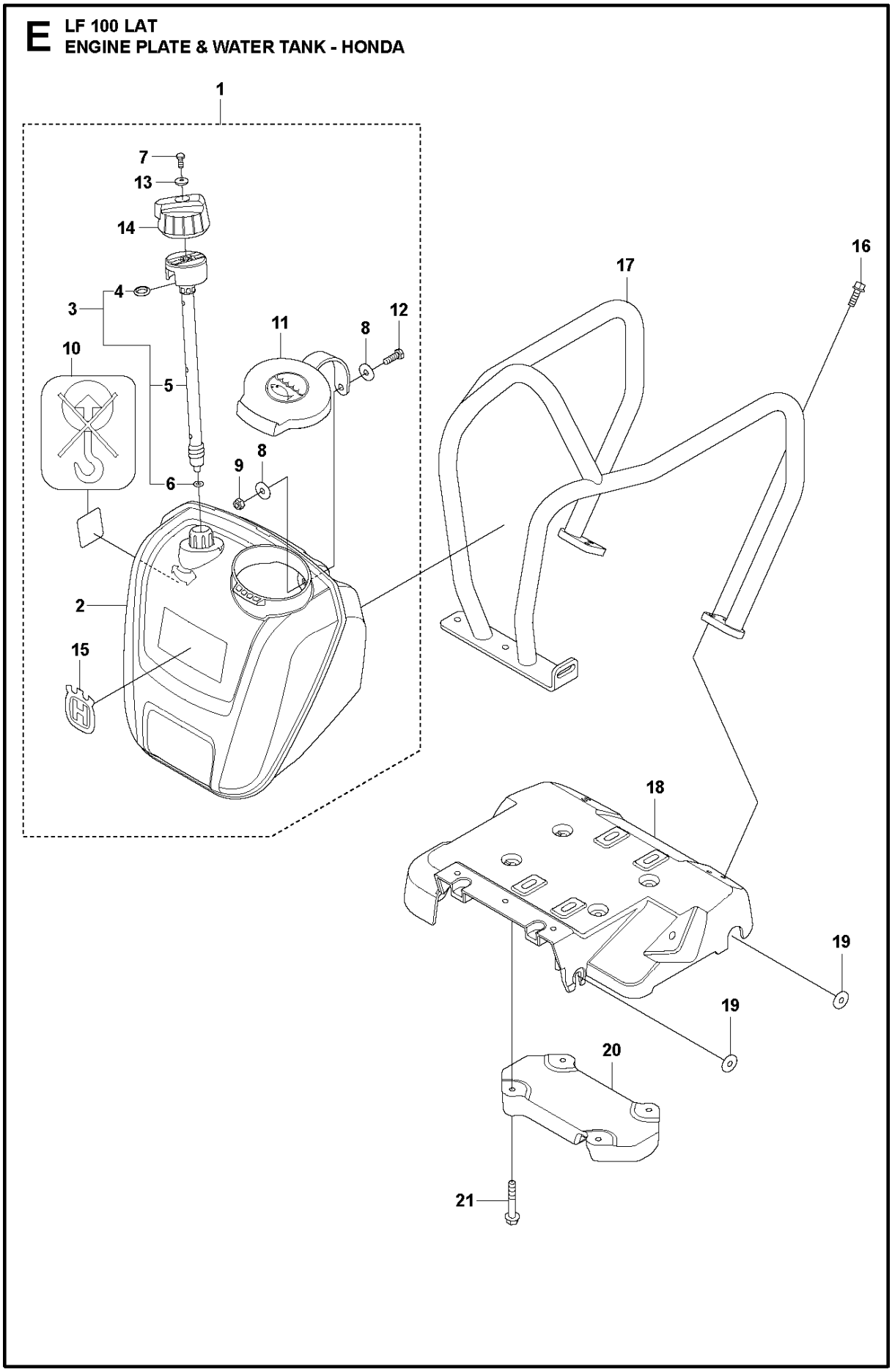
E
LF 100 LAT
ENGINE PLATE & WATER TANK - HONDA
1
7
13
14
4
3
10
5
6
11
8
12
9
8
2
15
17
16
18
19
19
20
21

ENGINE PLATE & WATER TANK - HONDA LF 100 L/LF 100 LAT, 967855101, 967855101, 967855102, 967855103, 967855104, 967896801, 2019-08

Ref	Part No	Description	Remark	QTY	KIT
1	596 39 29-01	SPRINKLER		1	
2	594 96 11-01	TANK		1	1
3	594 21 23-01	VALVE		1	1
4	594 12 79-01	O-RING	o-ring ф15x4	1	1
5	594 48 19-01	VALVE		1	1
6	594 12 80-01	O-RING	o-ring ф 8x2.5	1	1
7	595 03 32-01	SCREW	M6x16 8.8, A2K	1	1
8	595 06 10-01	WASHER	ф 8,4x25x2	2	1
9	595 06 27-01	NUT	M08 DIN985	1	1
10	594 48 33-01	DECAL	No lifting point	1	1
11	594 48 14-01	CAP		1	1
12	595 03 34-01	SCREW	м8x25	1	1
13	595 03 64-01	WASHER	NB 06,4 18,0 1,6 din 9021 b Zn	1	1
14	594 48 11-01	HANDLE		1	1
15	574 38 21-01	DECAL	HV Crown	1	1
16	595 18 57-01	SCREW	M8x25mm 8.8 A2K	7	
17	594 14 46-01	FRAME		1	
18	594 14 54-01	ENGINE PLATE		1	
19	594 52 64-01	WASHER	Square taper washer M10 22x22x4.6 dia.11 din 435	2	
20	594 86 84-01	WEIGHT		1	
21	594 49 91-01	SCREW	bolt with flange M8x50,M6SF,8.8,Ref.9002 8 8 50	4	

F **LF 100 LAT**
ENGINE PLATE & WATER TANK - HATZ

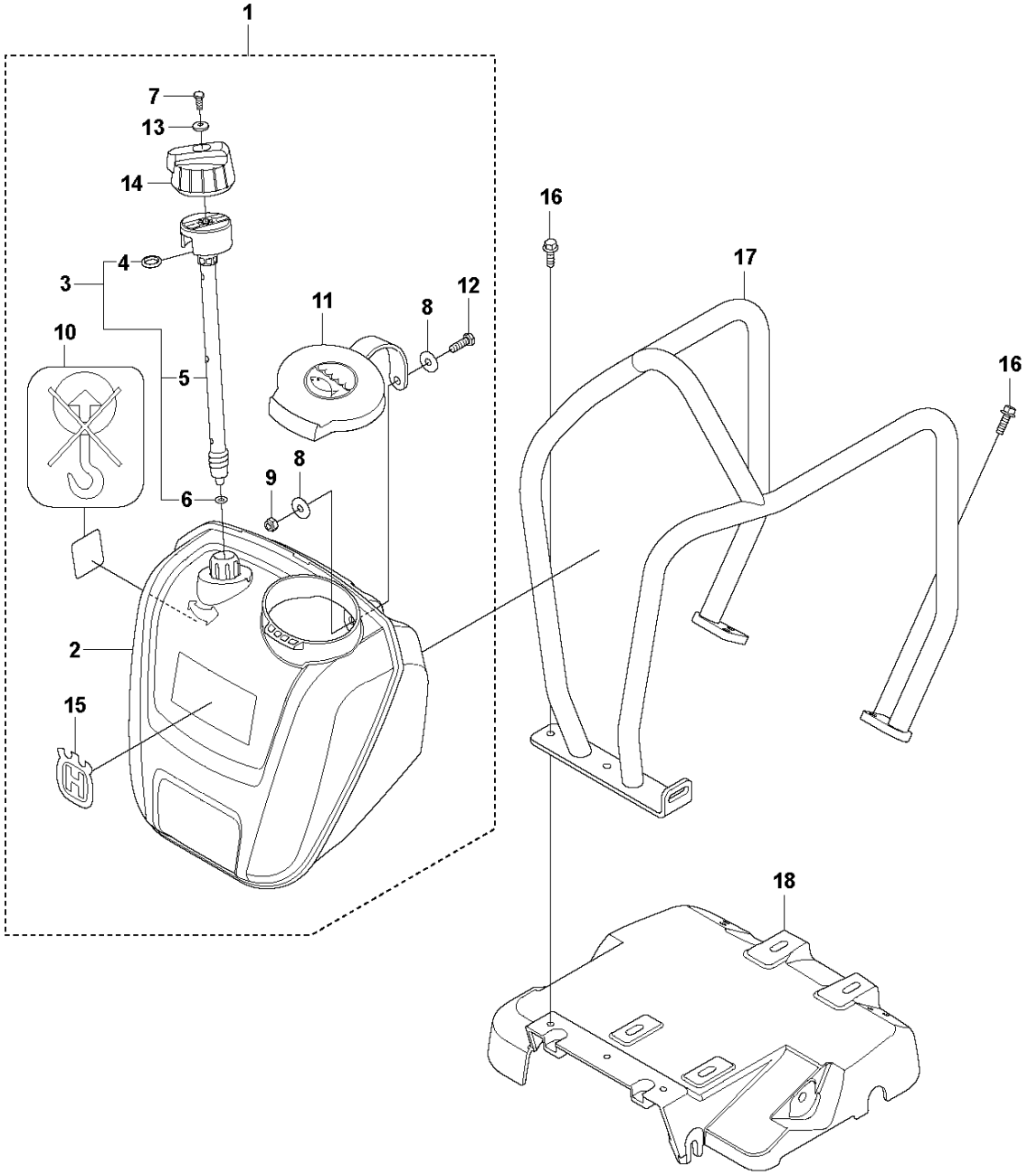

ENGINE PLATE & WATER TANK - HATZ LF 100 L/LF 100 LAT, 967855101, 967855101, 967855102, 967855103, 967855104, 967896801, 2019-08

Ref	Part No	Description	Remark	QTY	KIT
1	596 39 29-01	SPRINKLER		1	
2	594 96 11-01	TANK		1	1
3	594 21 23-01	VALVE		1	1
4	594 12 79-01	O-RING	o-ring ф15x4	1	1
5	594 48 19-01	VALVE		1	1
6	594 12 80-01	O-RING	o-ring ф 8x2.5	1	1
7	595 03 32-01	SCREW	M6x16 8.8, A2K	1	1
8	595 06 10-01	WASHER	ф 8,4x25x2	2	1
9	595 06 27-01	NUT	M08 DIN985	1	1
10	594 48 33-01	DECAL	decal No lifting point	1	1
11	594 48 14-01	CAP		1	1
12	595 03 34-01	SCREW	м8x25	1	1
13	595 03 64-01	WASHER	NB 06,4 18,0 1,6 din 9021 b Zn	1	1
14	594 48 11-01	HANDLE		1	1
15	574 38 21-01	DECAL	HV Crown	1	1
16	594 12 00-01	SCREW		7	
17	594 14 47-01	FRAME		1	
18	594 14 55-01	ENGINE PLATE		1	

G LF 100 L / LF 100 LAT
ENGINE INSTALLATION - HONDA

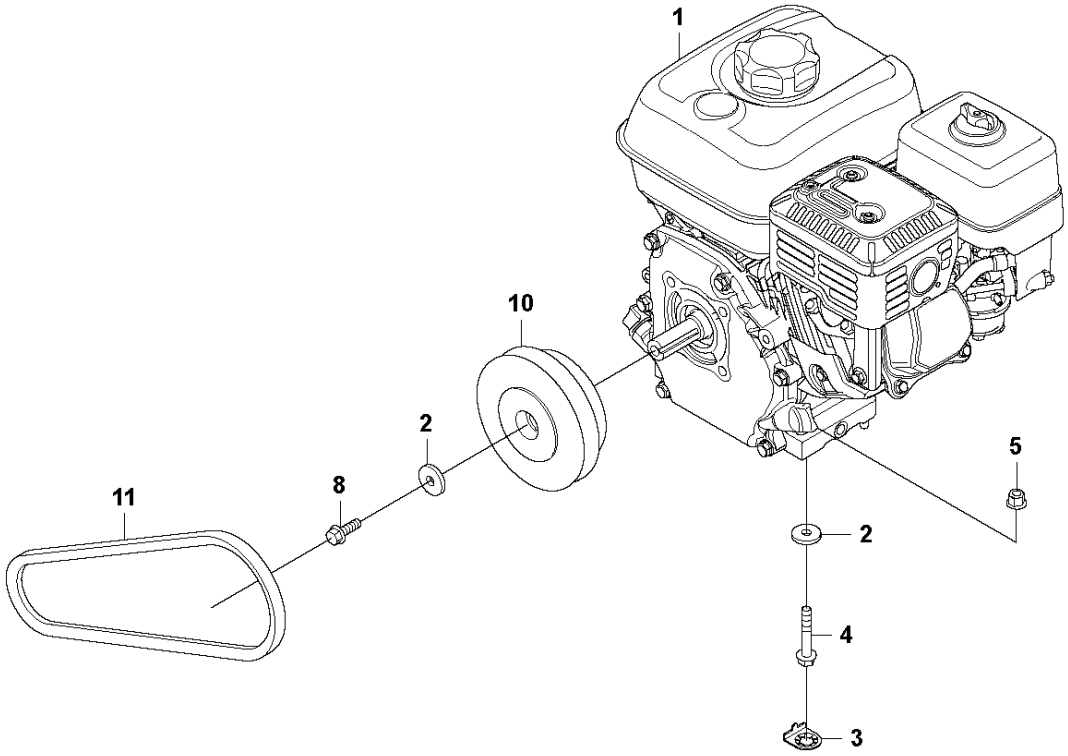

ENGINE INSTALLATION - HONDA LF 100 L/LF 100 LAT, 967855101, 967855101, 967855102, 967855103, 967855104, 967896801, 2019-08

Ref	Part No	Description	Remark	QTY KIT
1	594 16 11-01	ENGINE		1
2	595 11 29-01	WASHER	M08 8,4x26x4,0 300 HV	5
3	594 48 42-01	WASHER		4
4	594 49 91-01	SCREW	flange screw M8x50	4
5	594 12 30-01	LOCK NUT		4
8	594 12 00-01	SCREW	flange screw M8x25	1
10	594 48 01-01	CENTRIFUGAL CLUTCH		1
11	594 48 88-01	V-BELT		1

H LF 100 L / LF 100 LAT BELT GUARD - HONDA

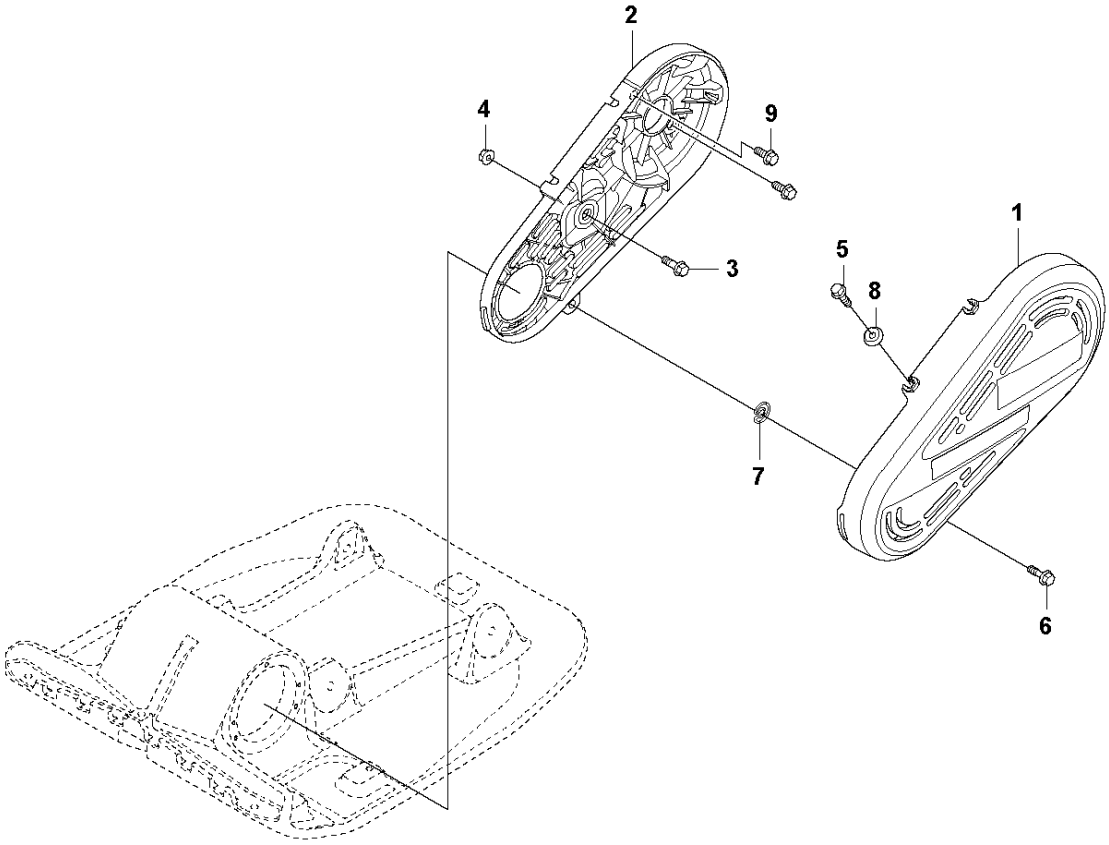

BELT GUARD - HONDA LF 100 L/LF 100 LAT, 967855101, 967855101, 967855102, 967855103, 967855104, 967896801, 2019-08

Ref	Part No	Description	Remark	QTY KIT
1	594 96 07-01	BELT GUARD	outer	1
2	594 48 31-01	BELT GUARD	inner	1
3	594 12 00-01	SCREW	M8 x 25 mm 8.8 A2K	1
4	594 12 30-01	LOCK NUT	M8 x 1.25 mm A2K	1
5	594 11 98-01	SCREW	FLANGE SCREW	3
6	594 64 80-01	SCREW	M8 x 25 mm 8.8 A2K	1
7	594 65 02-01	LOCKING SPRING		1
8	594 64 78-01	WASHER		3
9	595 28 73-01	SCREW	M8 x 20 mm 8.8 A2K	2

J **LF 100 L / LF 100 LAT**
ENGINE INSTALLATION - HATZ

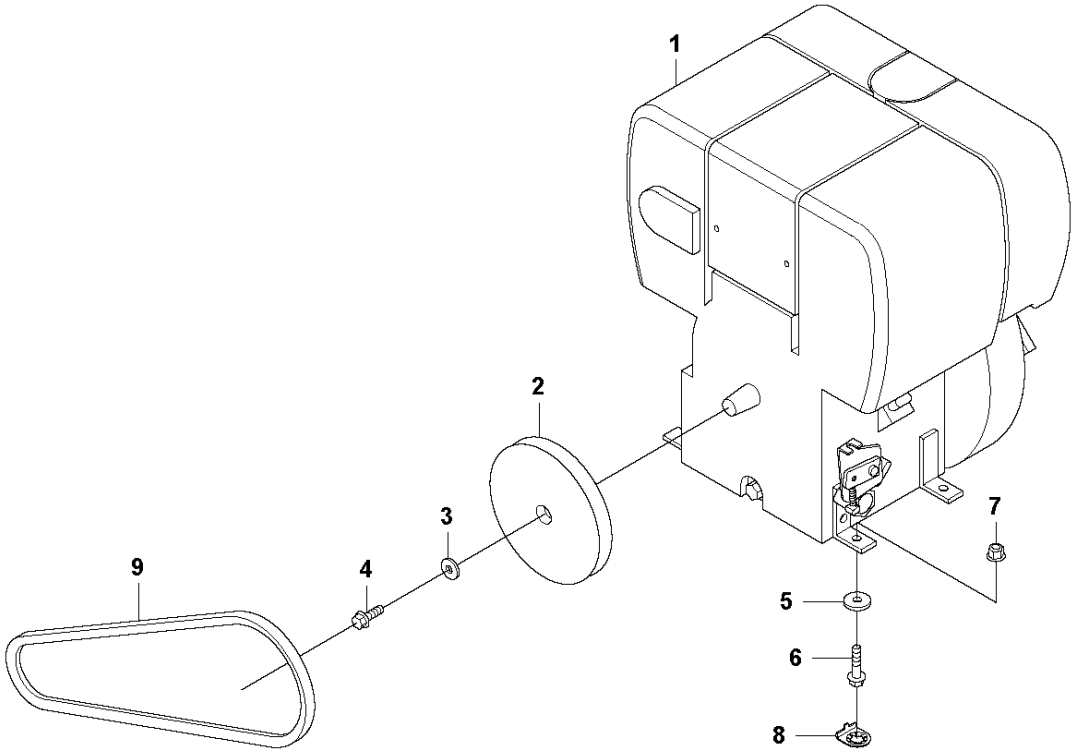

ENGINE INSTALLATION - HATZ LF 100 L/LF 100 LAT, 967855101, 967855101, 967855102, 967855103, 967855104, 967896801, 2019-08

Ref	Part No	Description	Remark	QTY KIT
1	595 17 73-01	ENGINE	Hatz 1B20 manual start	1
2	594 48 00-01	CLUTCH	Centrifugal	1
3	594 12 34-01	WASHER	Washer, 8.4 x 22 x 3 mm 300 HV	1
4	594 11 98-01	SCREW	Screw, M8 x 30 mm	1
5	595 11 29-01	WASHER	Washer, 8.4 x 22 x 3 mm	4
6	594 12 01-01	SCREW	Screw, M8 x 40 mm	4
7	594 12 30-01	LOCK NUT	Lock nut, M8 x 1.25 mm	4
8	594 48 42-01	WASHER		4
9	594 48 89-01	BELT		1

K LF 100 L / LF 100 LAT
BELT GUARD - HATZ

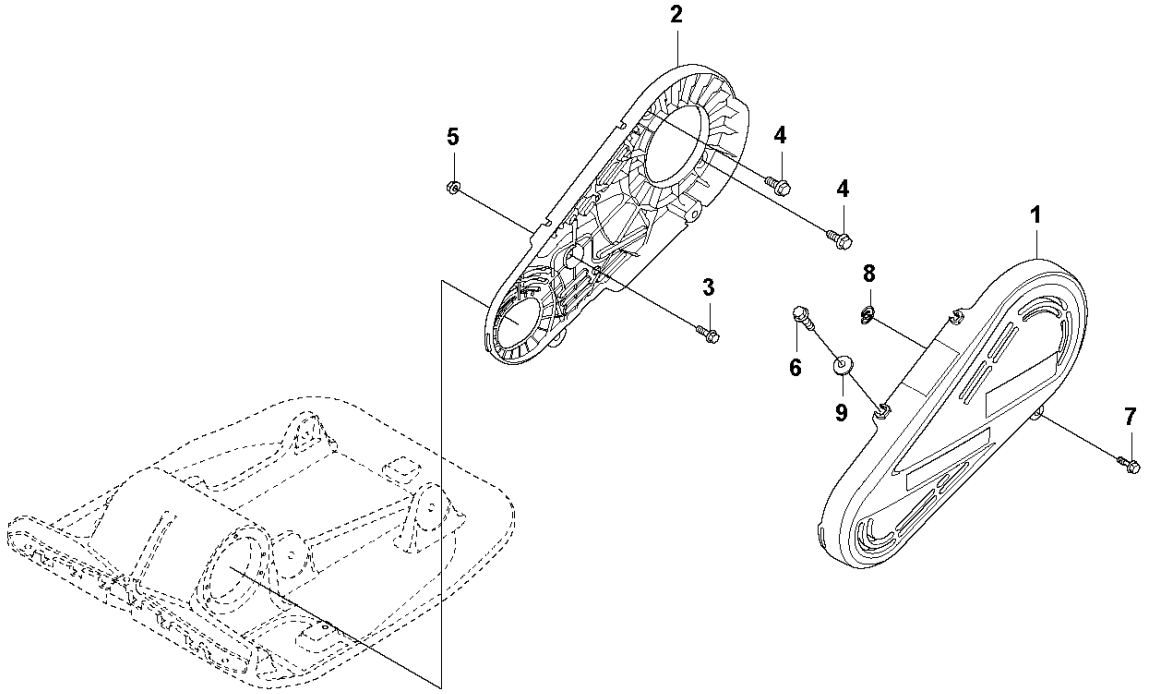

BELT GUARD - HATZ LF 100 L/LF 100 LAT, 967855101, 967855101, 967855102, 967855103, 967855104, 967896801, 2019-08

Ref	Part No	Description	Remark	QTY KIT
1	594 96 08-01	BELT GUARD		1
2	594 48 39-01	BELT GUARD	Inner	1
3	594 12 00-01	SCREW	M8 x 25 mm	1
4	595 99 01-01	SCREW	M10 x 25 mm	2
5	594 12 30-01	LOCK NUT	M8 x 1.25 mm	1
6	594 11 98-01	SCREW	M8 x 30 mm	2
7	594 64 80-01	SCREW	M8 x 25 mm 8.8 A2K	2
8	594 65 02-01	LOCKING SPRING		2
9	594 64 78-01	WASHER		2

L **LF 100 / LF 100 LAT**
ENGINE - HONDA GX 160 UT2 SXS4 OH

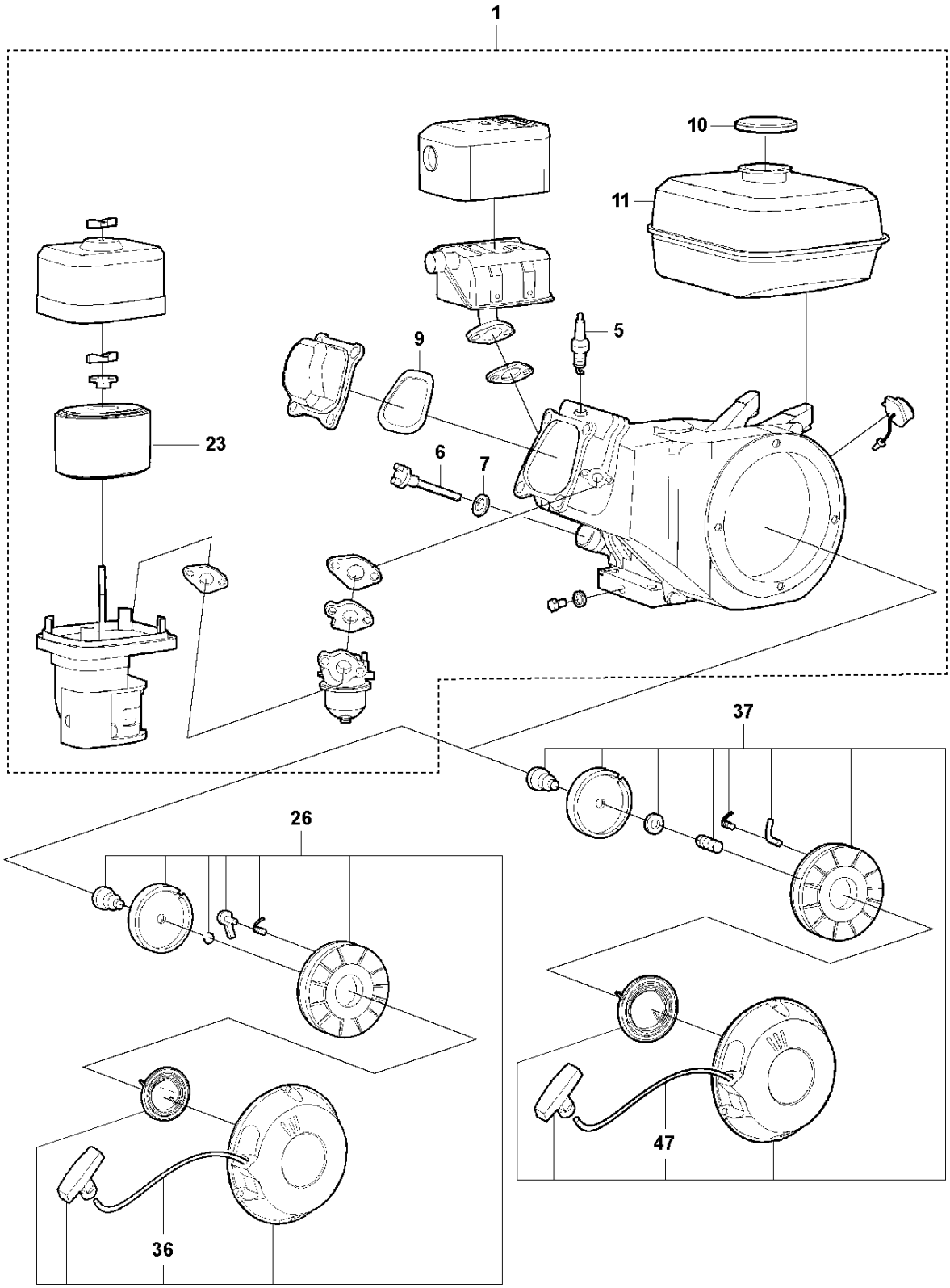

ENGINE - HONDA LF 100 L/LF 100 LAT, 967855101, 967855101, 967855102, 967855103, 967855104, 967896801, 2019-08

Ref	Part No	Description	Remark	QTY	KIT
1	594 16 11-01	ENGINE	Honda GX160UT2 SXS4 SD	1	
5	594 20 40-01	SPARK PLUG	(bpr6es) (ngk)	1	1
6	594 20 38-01	OIL		1	1
7	594 20 39-01	GASKET		1	1
9	595 04 88-01	GASKET		1	1
10	594 20 46-01	FUEL CAP		1	1
11	594 20 45-01	FUEL TANK		1	1
23	594 30 21-01	AIR FILTER	Delivered with outer and inner filter.	1	1
26	594 30 06-01	STARTER	Complete, Red, Valid up to engine serial number 1411005.	1	1
36	595 04 91-01	ROPE		1	1, 26
37	594 20 48-01	STARTER	recoil *nh1*, Complete, Black, Valid from engine serial number 1411006.	1	1
47	595 04 91-01	ROPE		1	1, 37

M **LF 100 L / LF 100 LAT**
ENGINE - HATZ 1B20 - MANUAL START

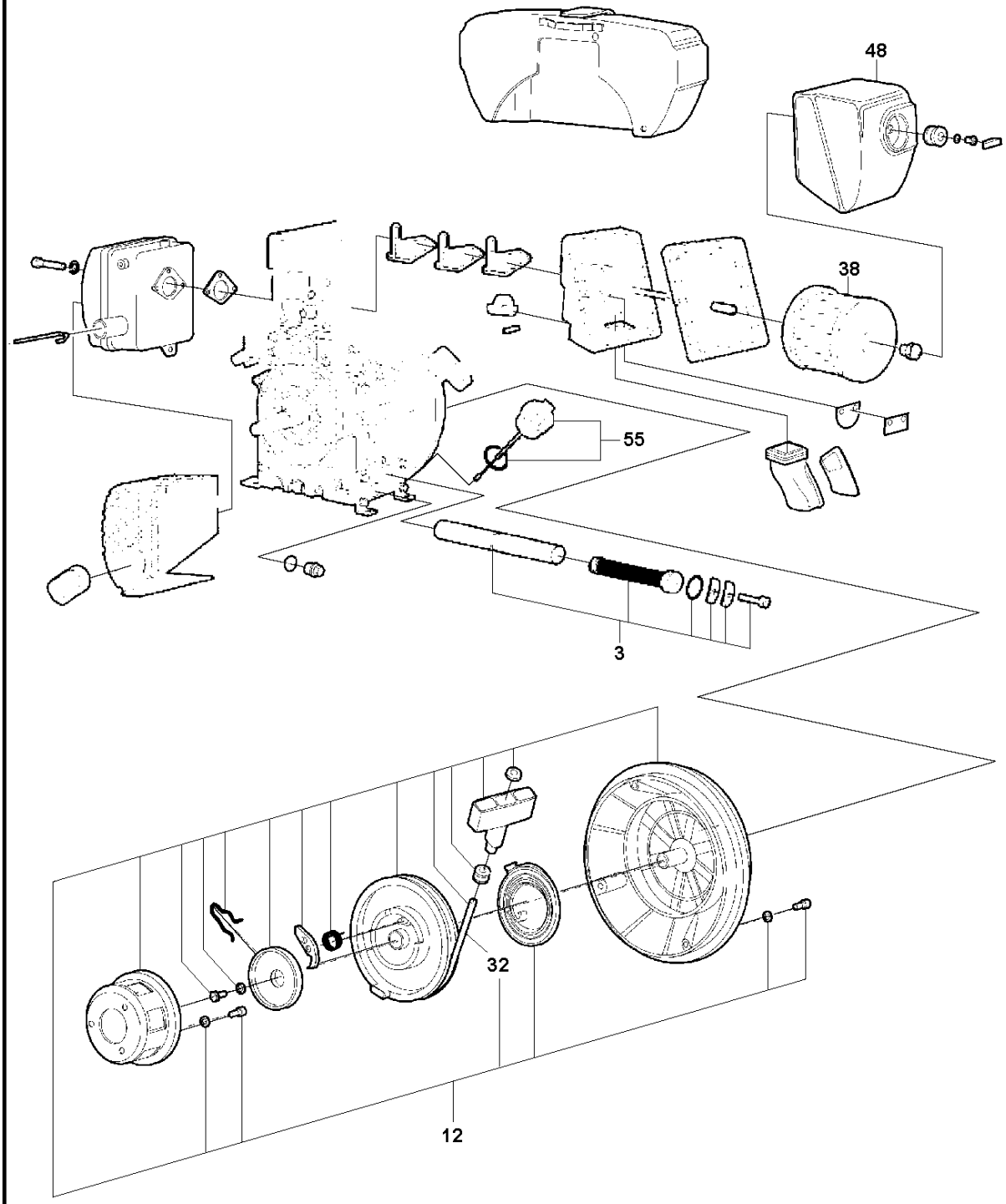

ENGINE - HATZ LF 100 L/LF 100 LAT, 967855101, 967855101, 967855102, 967855103, 967855104, 967896801, 2019-08

Ref	Part No	Description	Remark	QTY	KIT
3	594 57 01-01	STRAINER	Complete	1	
12	594 56 84-01	STARTER	Complete	1	
32	594 56 90-01	ROPE		1	12
38	594 57 11-01	FILTER		1	
48	594 57 13-01	PROTECTIVE COVER		1	
55	594 57 80-01	OIL		1	

N **LF 100 L / LF 100 LAT**
FUEL TANK - HATZ 1B20

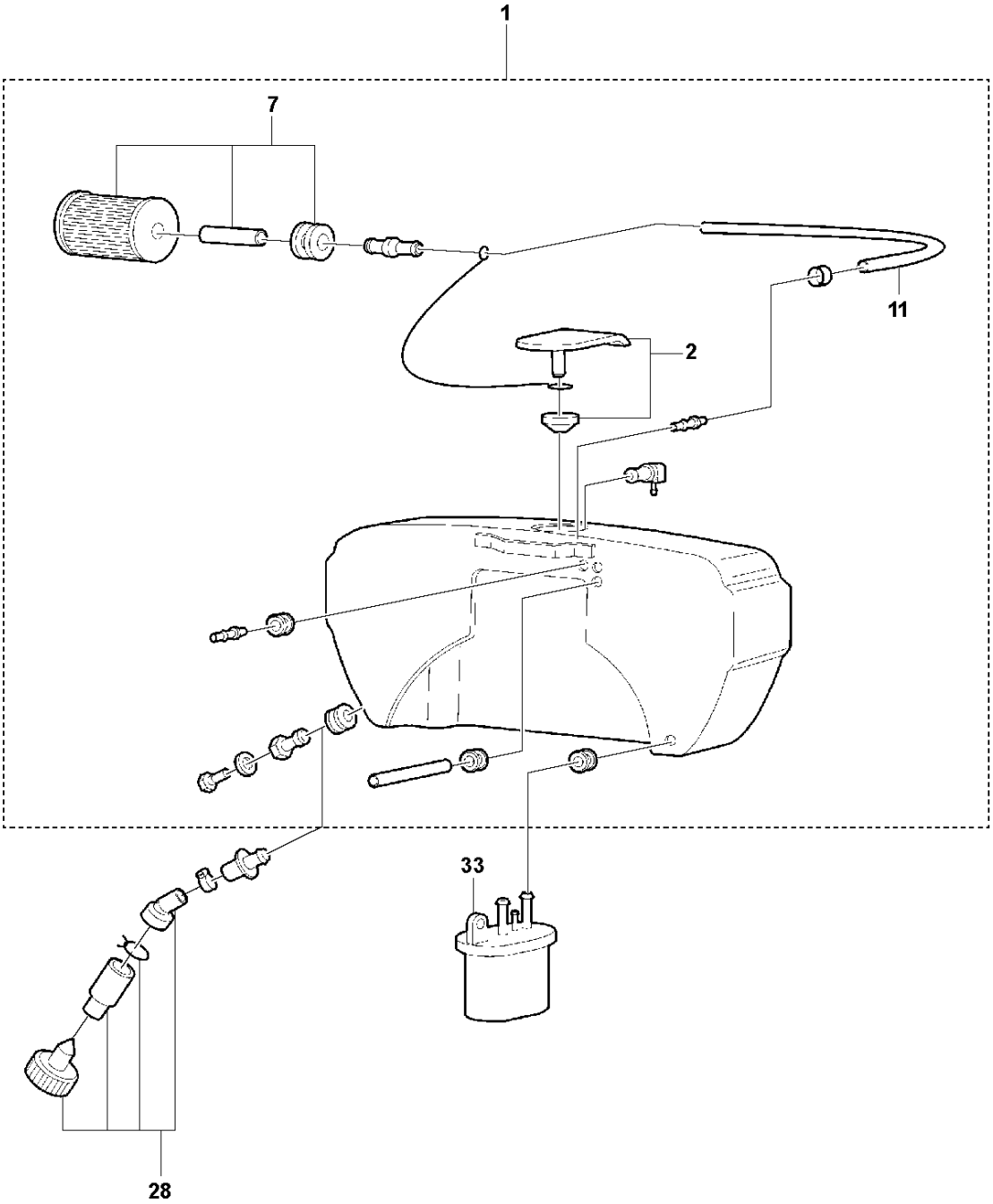

FUEL TANK - HATZ LF 100 L/LF 100 LAT, 967855101, 967855101, 967855102, 967855103, 967855104, 967896801, 2019-08

Ref	Part No	Description	Remark	QTY	KIT
1	594 20 30-01	FUEL TANK		1	
2	594 56 61-01	FUEL CAP		1	1
7	594 59 51-01	FUEL FILTER		1	1
11	594 20 34-01	FUEL HOSE		1	1
28	594 58 32-01	WATER SEPARATOR		1	
33	594 60 19-01	FUEL FILTER		1	

P **LF 100 L / LF 100 LAT**
FORK LIFTING DEVICE

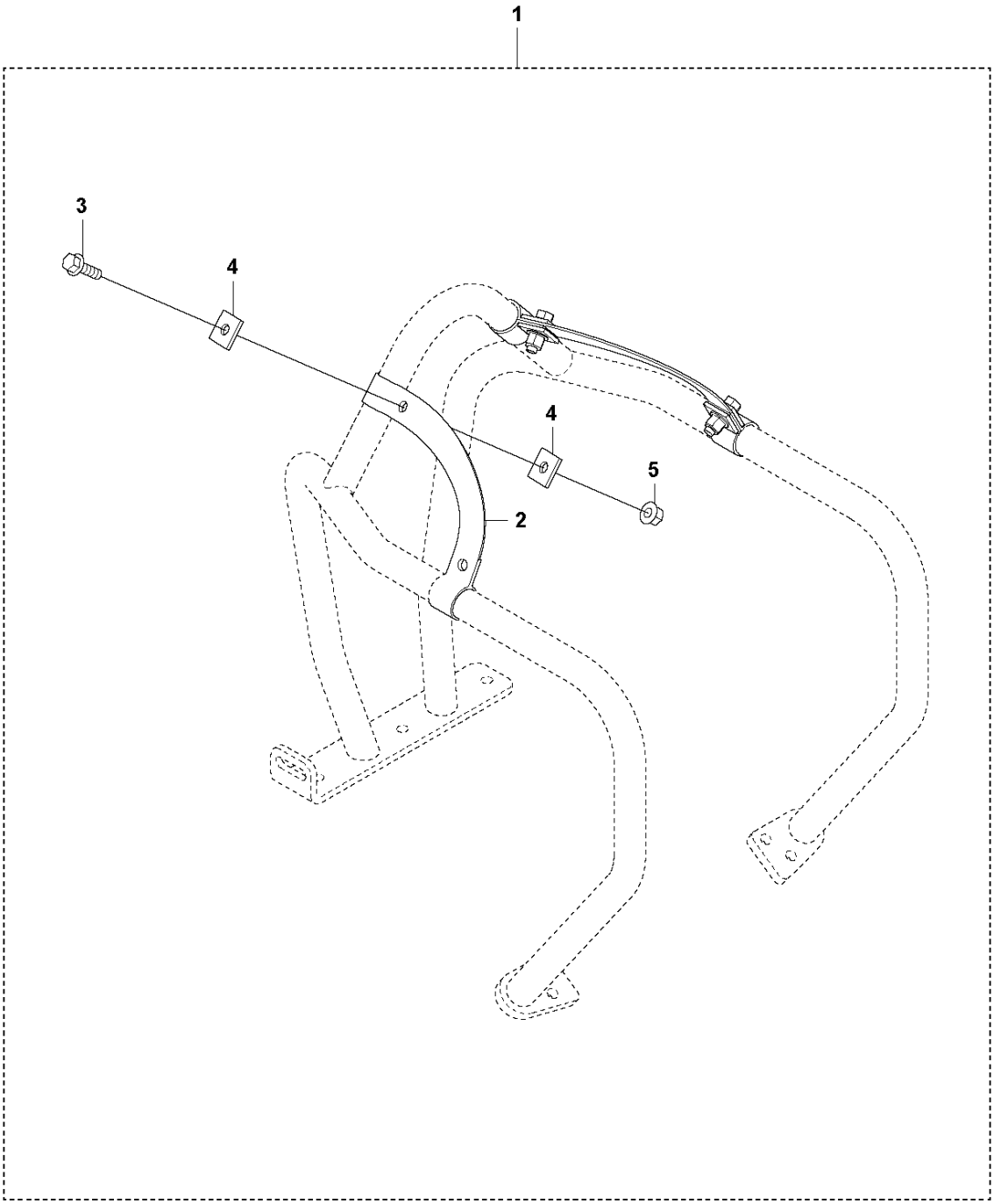

FORK LIFTING DEVICE LF 100 L/LF 100 LAT, 967855101, 967855101, 967855102, 967855103, 967855104, 967896801, 2019-08

Ref	Part No	Description	Remark	QTY	KIT
1	595 50 31-01	FORK		1	
2	594 48 99-01	HANDLE		2	1
3	594 11 98-01	SCREW	м8x30	4	1
4	595 18 27-01	WASHER	square washer 9x25x3	8	1
5	594 12 30-01	LOCK NUT	M08x1,25, -8, A2K	4	1

Q LF 100 L / LF 100 LAT HANDLE

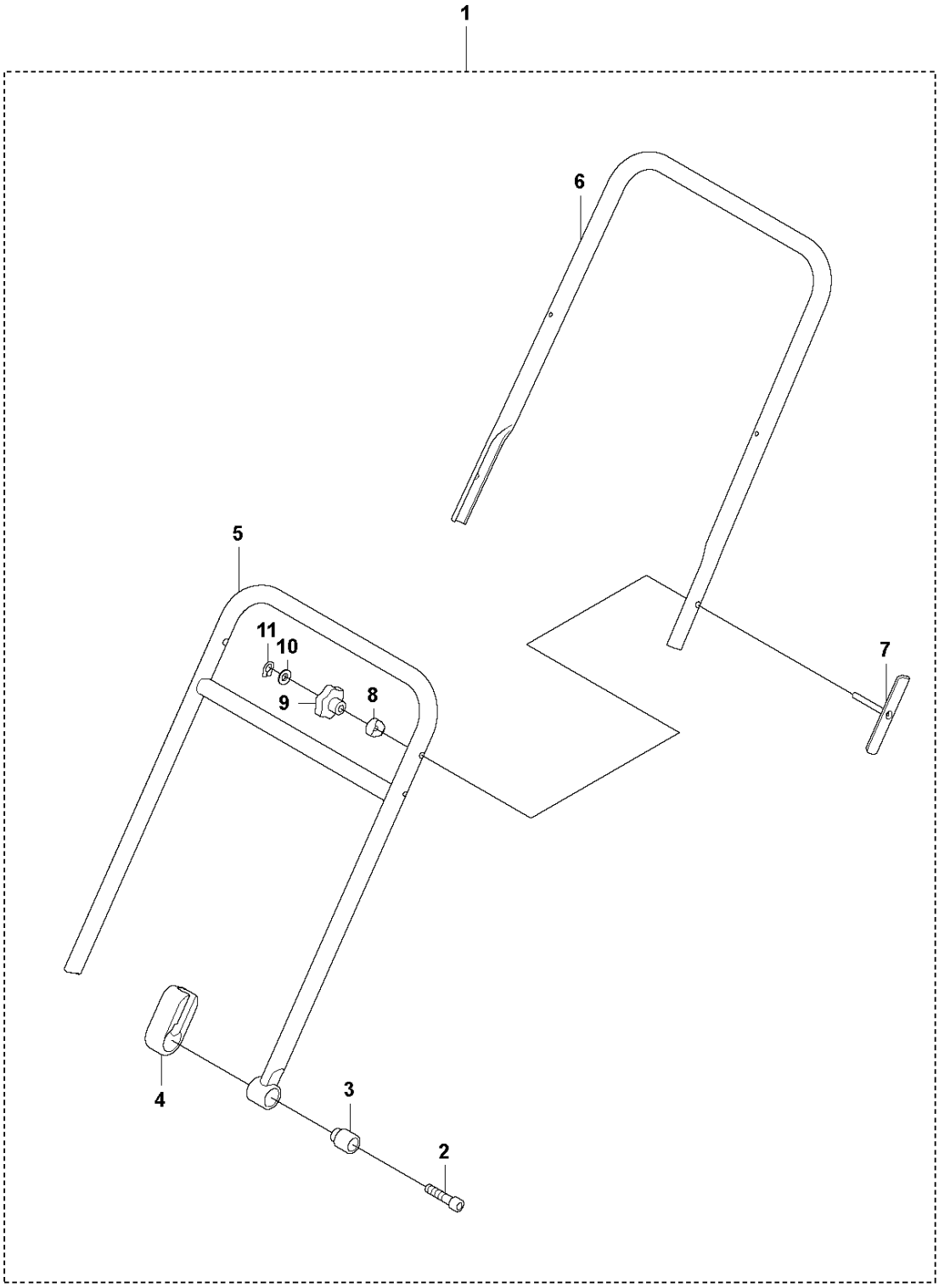

HANDLE LF 100 L/LF 100 LAT, 967855101, 967855101, 967855102, 967855103, 967855104, 967896801, 2019-08

Ref	Part No	Description	Remark	QTY	KIT
1	594 76 11-01	HANDLE	Handle, complete	1	
2	595 07 16-01	SOCKET	M12 x 50 mm 8.8 A3K	2	1
3	594 65 47-01	SLEEVE		2	1
4	594 48 04-01	RADIATOR		2	1
5	594 65 40-01	HANDLE	Lower	1	1
6	594 65 41-01	HANDLE	Upper	1	1
7	594 65 44-01	BRACKET		2	1
8	594 65 42-01	SLEEVE		2	1
9	594 65 43-01	KNOB		2	1
10	594 12 38-01	PLANE WASHER	5,3x10x1 300HV	2	1
11	594 26 55-01	RING	4.8 x 7 x 0.6 mm, 0.18 x 0.26 x 0.02 in.	2	1

R **LF 100 L / LAF 100 LAT**
VIBRATION DAMPED HANDLE

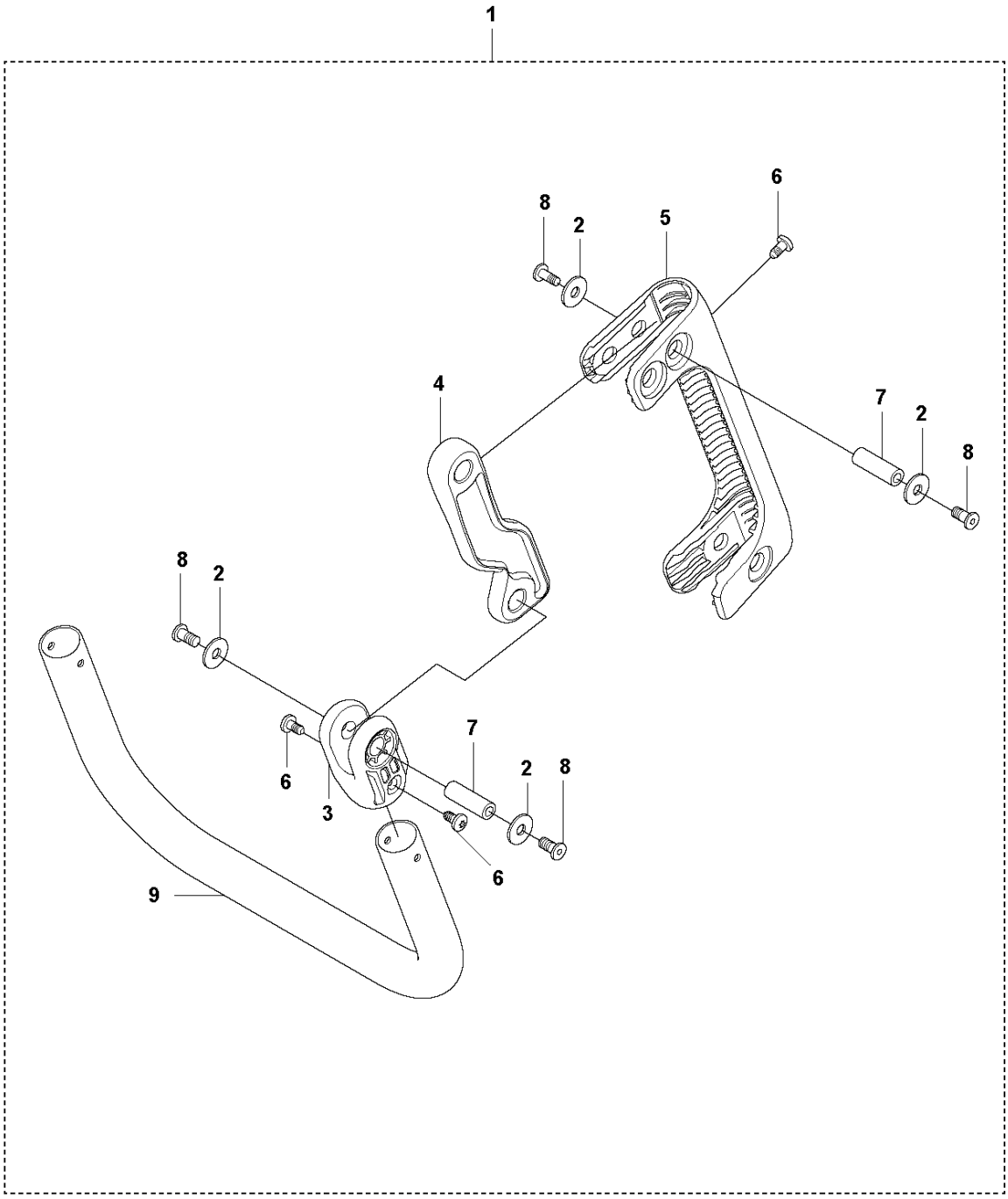

VIBRATION DAMPED HANDLE LF 100 L/LF 100 LAT, 967855101, 967855101, 967855102, 967855103, 967855104, 967896801, 2019-08

Ref	Part No	Description	Remark	QTY	KIT
1	594 20 50-01	HANDLE		1	
2	594 52 66-01	WASHER	ф6.4/18.0x1.6	16	1
3	594 48 22-01	BRACKET		2	1
4	594 48 05-01	ABSORBER		2	1
5	594 48 21-01	BRACKET		2	1
6	594 52 50-01	SCREW	M5 x 10 mm A2K	8	1
7	594 52 47-01	NUT	M6 x 30 mm 8.8	8	1
8	594 52 67-01	SCREW	M6 x 12 mm 10.9 A2T	16	1
9	594 16 63-01	HANDLE		1	1

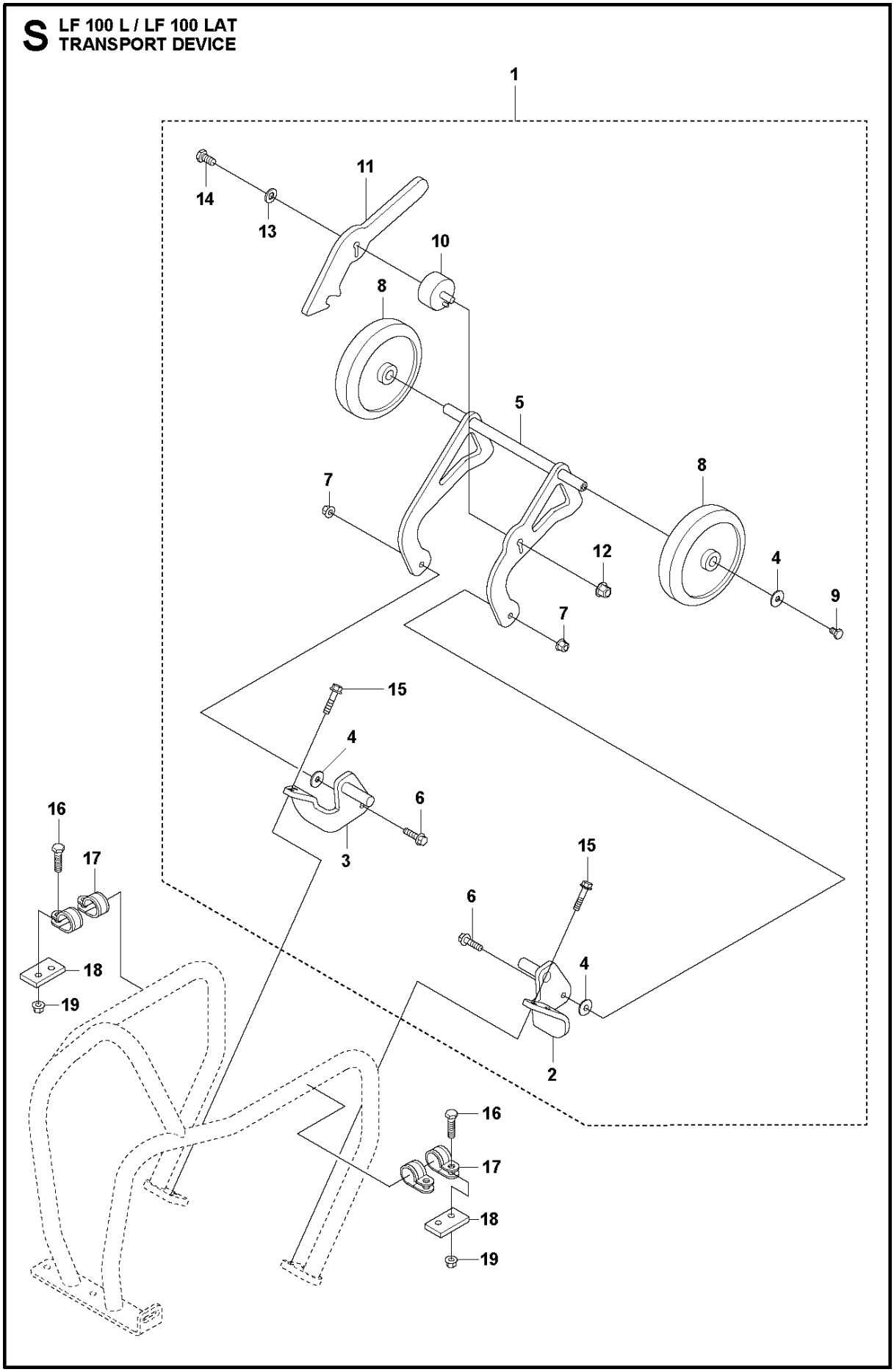
S LF 100 L / LF 100 LAT
TRANSPORT DEVICE
1
11
14
13
10
8
5
8
7
12
4
9
7
15
4
6
3
16
17
15
6
18
4
19
2
16
17
18
19

TRANSPORT DEVICE LF 100 L/LF 100 LAT, 967855101, 967855101, 967855102, 967855103, 967855104, 967896801, 2019-08

Ref	Part No	Description	Remark	QTY	KIT
1	594 20 49-01	TRANSPORT GUARD	Transport device	1	
2	594 64 87-01	BRACKET	Left	1	1
3	594 64 89-01	BRACKET	Right	1	1
4	595 06 10-01	WASHER	8,4x25x2 mm	4	1
5	594 64 88-01	FORK		1	1
6	594 11 98-01	SCREW	M8x30 mm 8.8 A2K	2	1
7	594 12 30-01	LOCK NUT	M8x1.25 mm A2K	2	1
8	594 45 55-01	WHEEL	WHEEL	2	1
9	596 88 97-07	SCREW	SCREW Hex. Head M6S M8x12 8.8 fzb	2	1
10	594 46 27-01	ABSORBER	shock absorber	1	1
11	594 65 10-01	HOOK		1	1
12	595 06 47-01	LOCK NUT	M10	1	1
13	594 74 74-01	WASHER	M10 10,5x22x2,0 300 HV	1	1
14	594 11 84-01	SCREW	M10x20 mm 8.8 A3K	1	1
15	594 12 00-01	SCREW	M8x25mm 8.8 A2K	4	1
16	595 46 63-01	SCREW	M06x025H, 8.8, A2K	4	
17	595 06 85-01	CLAMP	22x6.4x15	4	
18	594 64 60-01	STOP		2	
19	595 11 26-01	NUT	M06x1,00, -8, A2K	4	

T **LF 100 L / LF 100 LAT**
BLOCK PAVING PLATE 500 MM (19,7”)

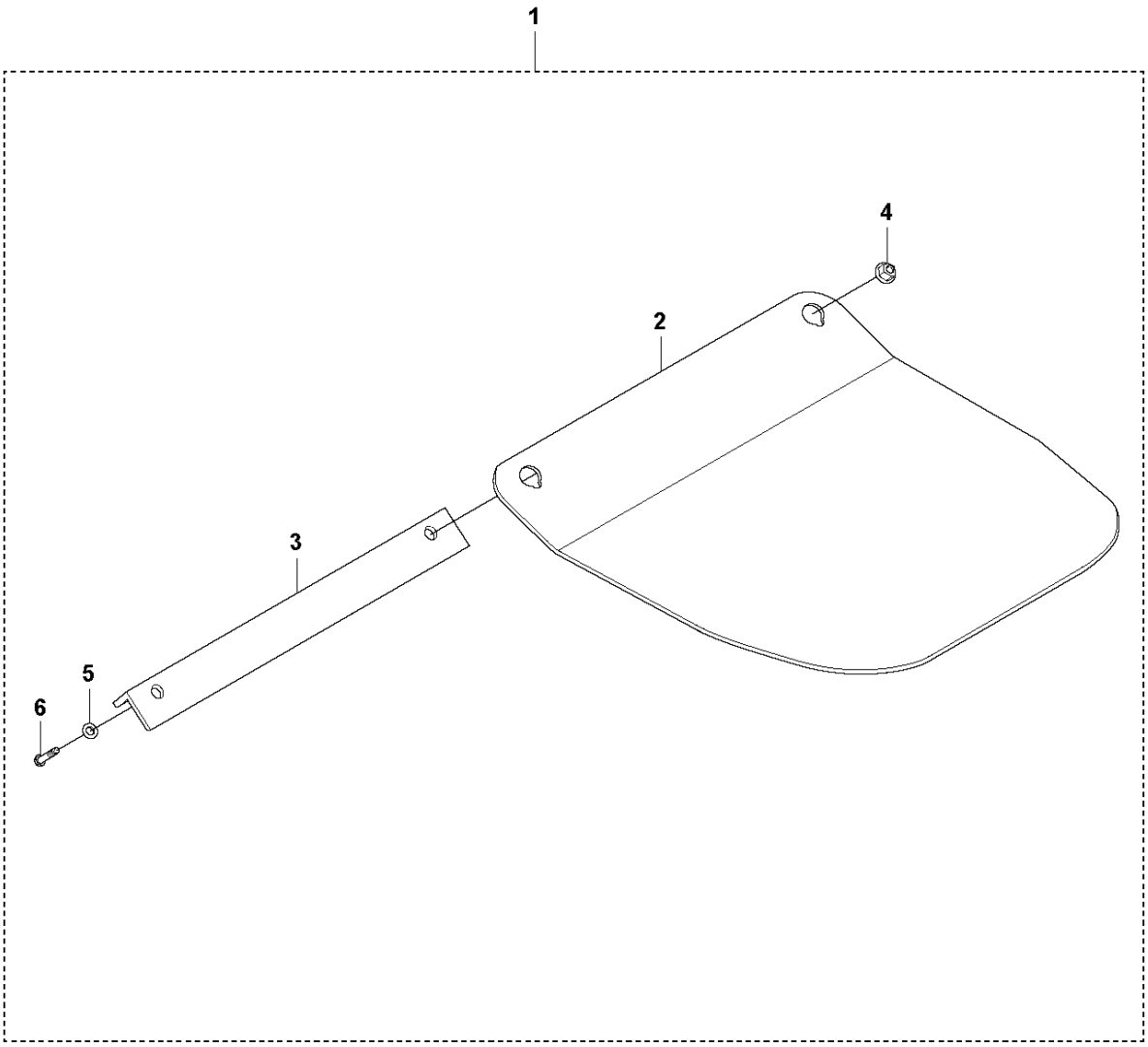

BLOCK PAVING PLATE 500 MM LF 100 L/LF 100 LAT, 967855101, 967855101, 967855102, 967855103, 967855104, 967896801, 2019-08

Ref	Part No	Description	Remark	QTY	KIT
1	594 86 82-01	BLOCK	Complete	1	
2	594 48 48-01	PLATE	"Polyurethane plate, 500 mm, 19.7""""	1	1
3	594 48 49-01	BRACKET		1	1
4	594 12 30-01	LOCK NUT	M8 x 1.25 mm A2K	2	1
5	595 03 66-01	WASHER	8.4x 16x1.5 mm 300HV	2	1
6	594 52 25-01	SCREW	M8 x 75 mm 8.8 A2K	2	1

U **LF 100 L / LF 100 LAT**
START UP KIT - HONDA

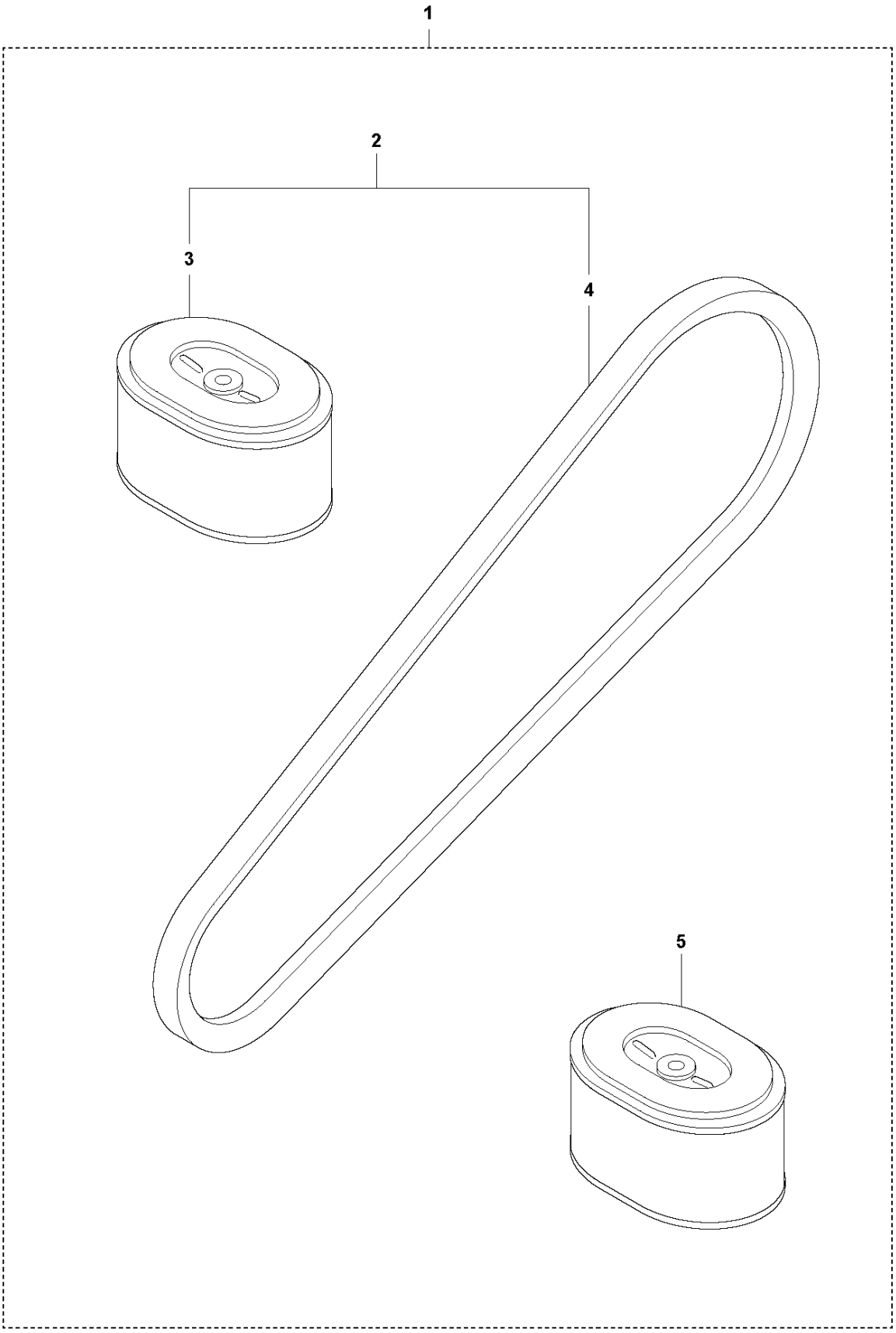

START UP KIT - HONDA LF 100 L/LF 100 LAT, 967855101, 967855101, 967855102, 967855103, 967855104, 967896801, 2019-08

Ref	Part No	Description	Remark	QTY	KIT
1	595 38 53-01	SERVICE KIT		1	
2	594 21 62-01	SERVICE KIT	12 months / 200 hours service kit - Honda	1	1
3	594 30 21-01	AIR FILTER	Complete	1	1,2
4	594 48 88-01	V-BELT		1	1,2
5	594 30 21-01	AIR FILTER	Complete	1	1

V LF 100 L / LF 100 LAT
12 MONTHS / 200 HOURS SERVICE KIT - HONDA

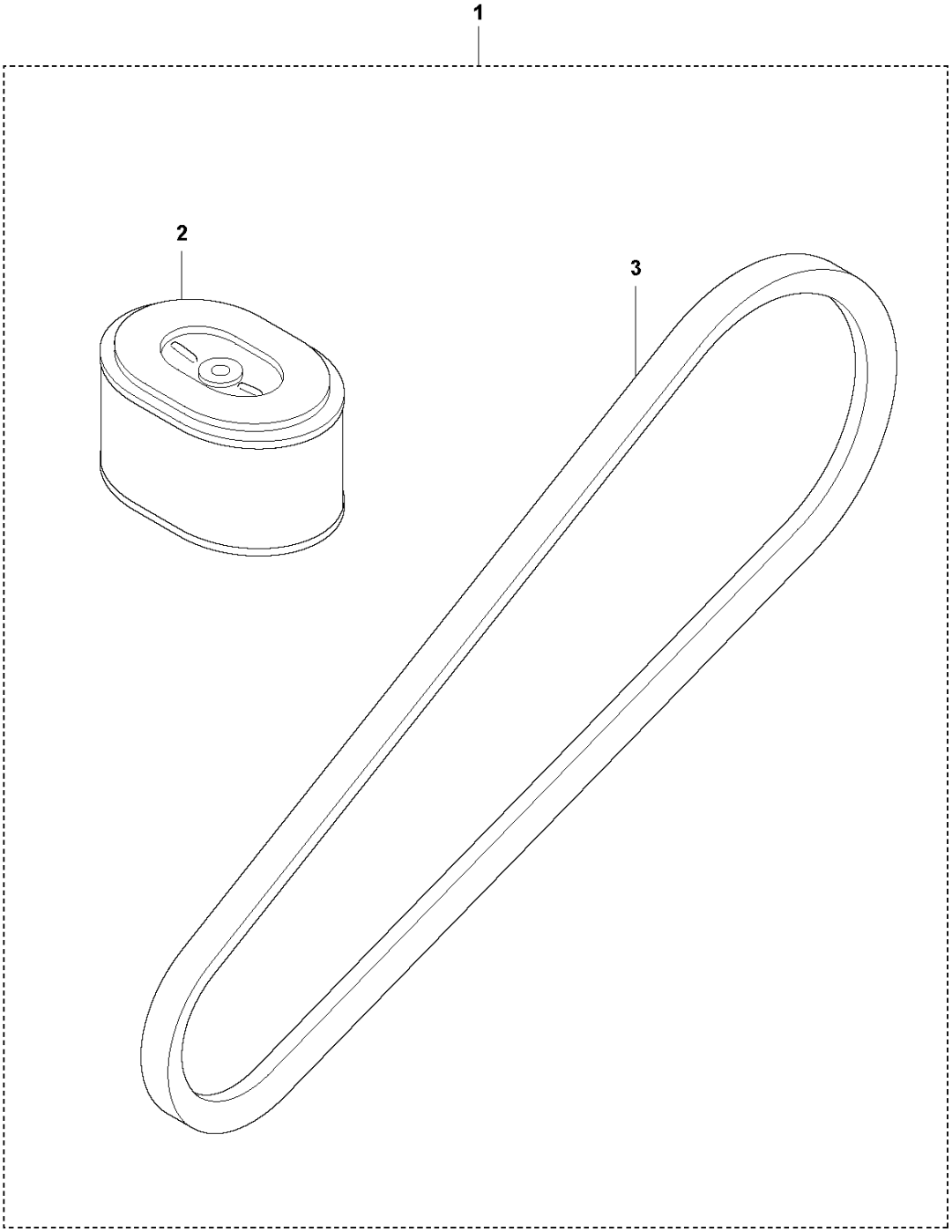

12 MONTHS / 200 HOURS SERVICE KIT - HONDA LF 100 L/LF 100 LAT, 967855101, 967855101, 967855102, 967855103, 967855104, 967896801, 2019-08

Ref	Part No	Description	Remark	QTY	KIT
1	594 21 62-01	SERVICE KIT		1	1
2	594 30 21-01	AIR FILTER	complete	1	1
3	594 48 88-01	V-BELT		1	1

W **LF 100 L / LF 100 LAT**
START UP KIT - HATZ

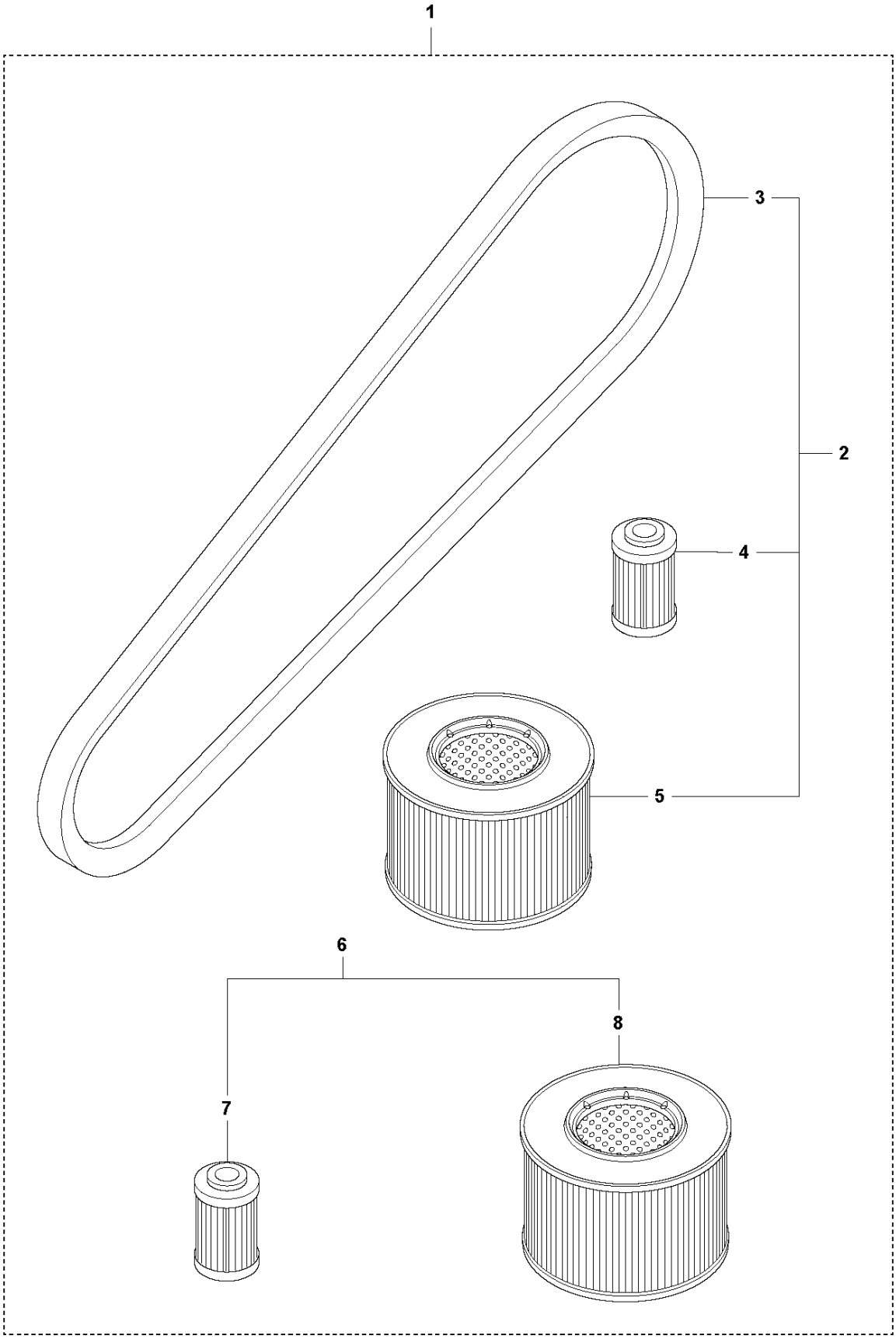

START UP KIT - HATZ LF 100 L/LF 100 LAT, 967855101, 967855101, 967855102, 967855103, 967855104, 967896801, 2019-08

Ref	Part No	Description	Remark	QTY	KIT
1	594 21 82-01	SERVICE KIT		1	
2	594 21 82-01	SERVICE KIT	12 months / 500 hours service kit - Hatz	1	1
3	594 48 89-01	BELT		1	1,2
4	594 59 51-01	FUEL FILTER		1	1,2
5	594 57 11-01	FILTER		1	1,2
6	594 21 46-01	SERVICE KIT	Six months / Every 250 hours kit - Hatz	1	1
7	594 59 51-01	FUEL FILTER		1	1,6
8	594 57 11-01	FILTER		1	1,6

X LF 100 L / LF 100 LAT
12 MONTHS / 500 HOURS SERVICE KIT - HATZ

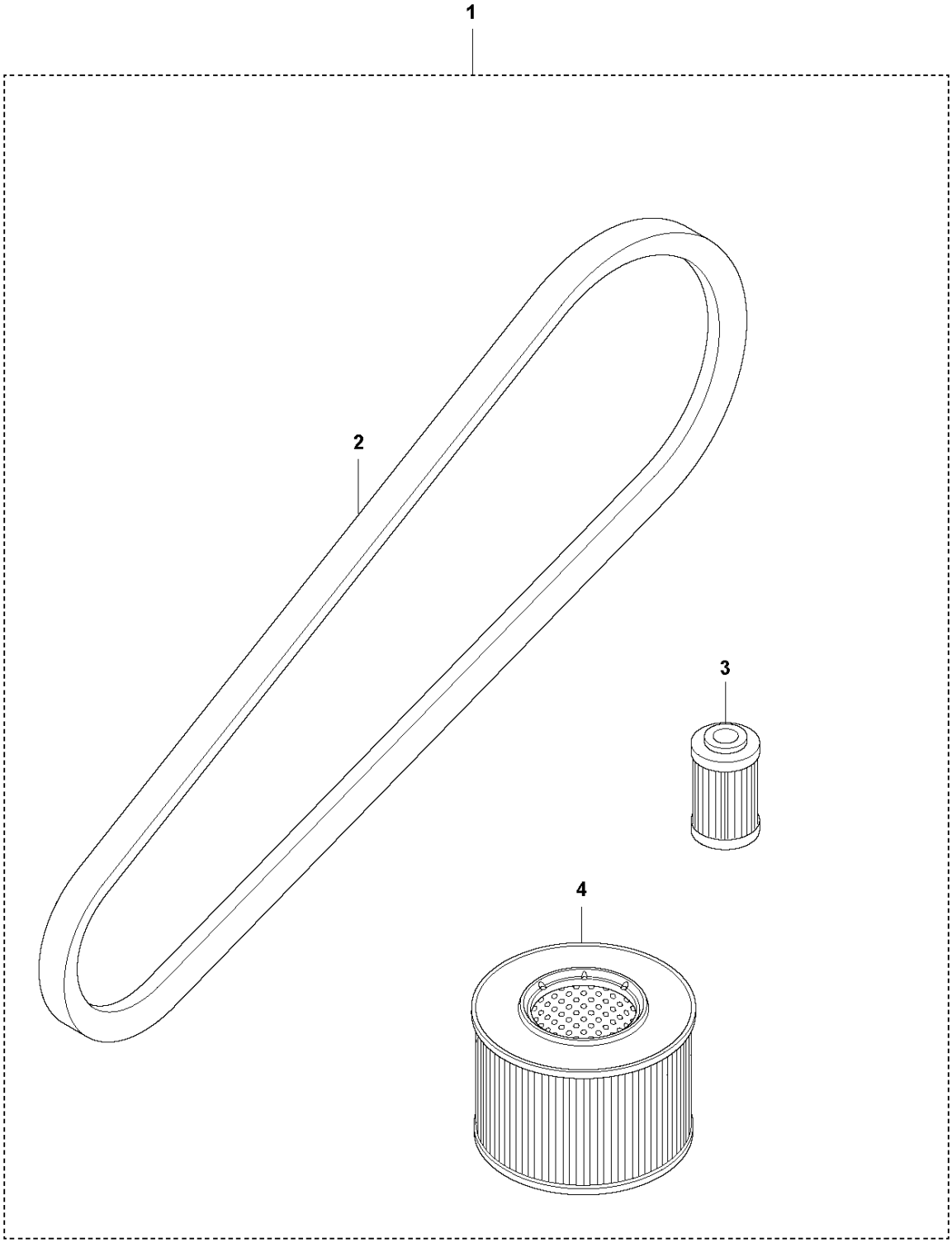

12 MONTHS / 500 HOURS SERVICE KIT - HATZ LF 100 L/LF 100 LAT, 967855101, 967855101, 967855102, 967855103, 967855104, 967896801, 2019-08

Ref	Part No	Description	Remark	QTY	KIT
1	594 21 67-01	SERVICE KIT		1	
2	594 48 89-01	BELT		1	1
3	594 59 51-01	FUEL FILTER		1	1
4	594 57 11-01	FILTER		1	1

Y LF 100 L / LF 100 LAT
SIX MONTHS / EVERY 250 HOURS KIT - HATZ

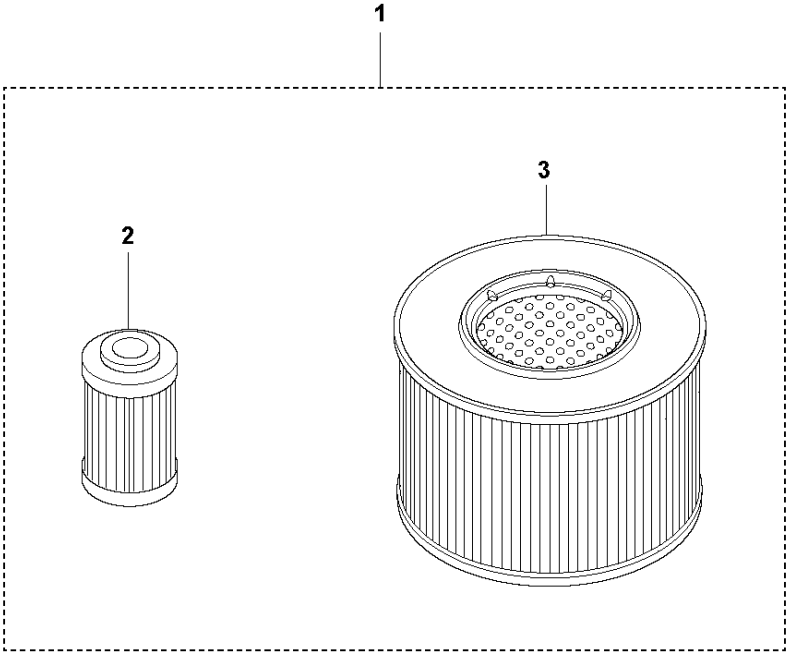

6 MONTHS / 250 HOURS SERVICE KIT - HATZ LF 100 L/LF 100 LAT, 967855101, 967855101, 967855102, 967855103, 967855104, 967896801, 2019-08

Ref	Part No	Description	Remark	QTY	KIT
1	594 21 46-01	SERVICE KIT		1	
2	594 59 51-01	FUEL FILTER		1	1
3	594 57 11-01	FILTER		1	1

Z LF 100
SHOCK ABSORBER REPAIR KIT - HONDA

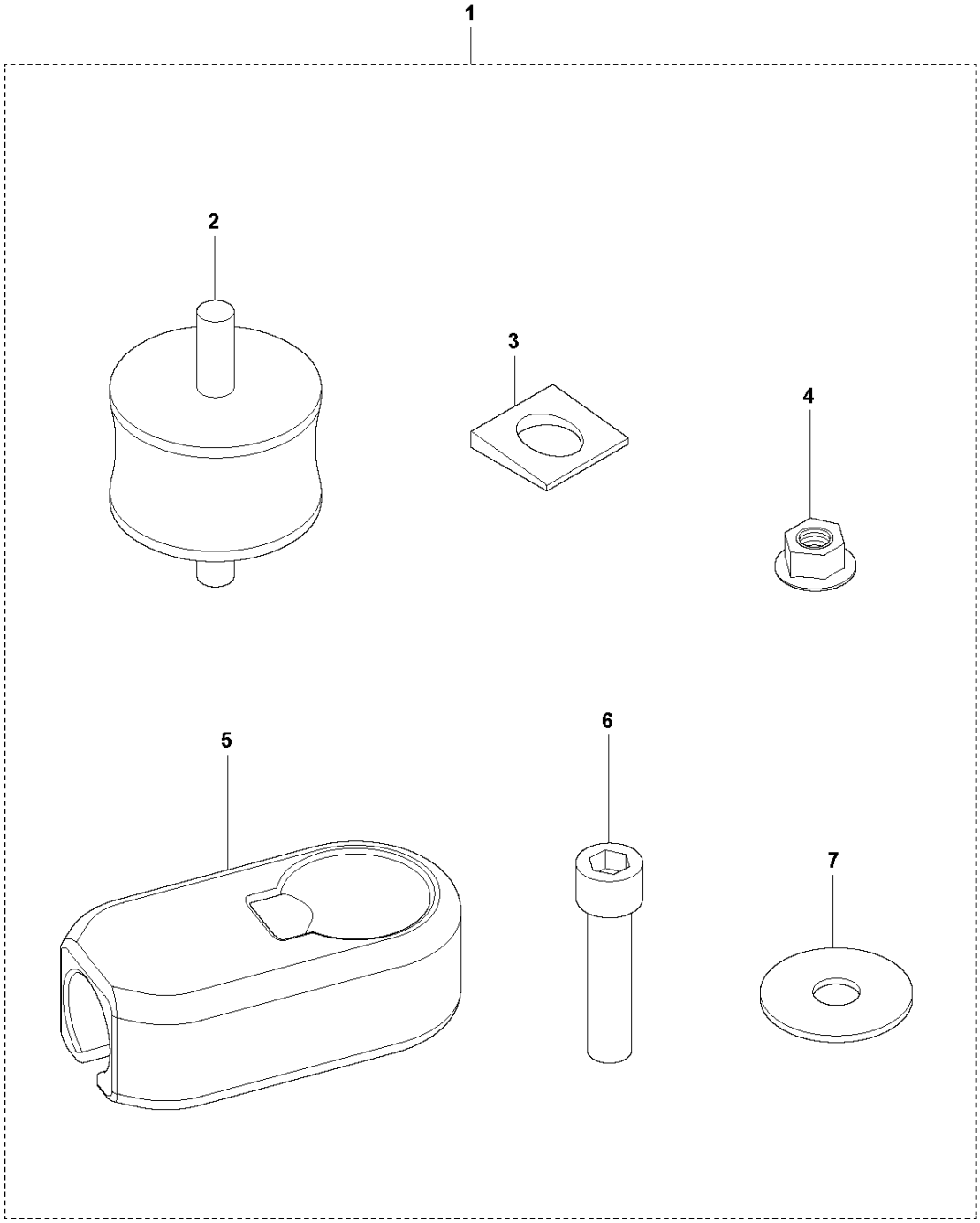

SHOCK ABSORBER REPAIR KIT - HONDA LF 100 L/LF 100 LAT, 967855101, 967855101, 967855102, 967855103, 967855104, 967896801, 2019-08

Ref	Part No	Description	Remark	QTY	KIT
1	594 19 46-01	REPAIR KIT		1	
2	594 34 19-01	ABSORBER		4	1
3	594 52 64-01	WASHER	Square taper washer M10 22x22x4.6 dia.11 din 435	4	1
4	595 18 48-01	HEXAGON NUT	Nut, M10 A3K	8	1
5	594 48 04-01	RADIATOR		2	1
6	594 53 00-01	SCREW	Screw, M12 x 50 mm 8.8 A3K	2	1
7	594 83 85-01	WASHER	022x10,5x4,0, S355JR, UNTR	4	1

AA LF 100 L / LF 100 LAT
SHOCK ABSORBER REPAIR KIT - HATZ

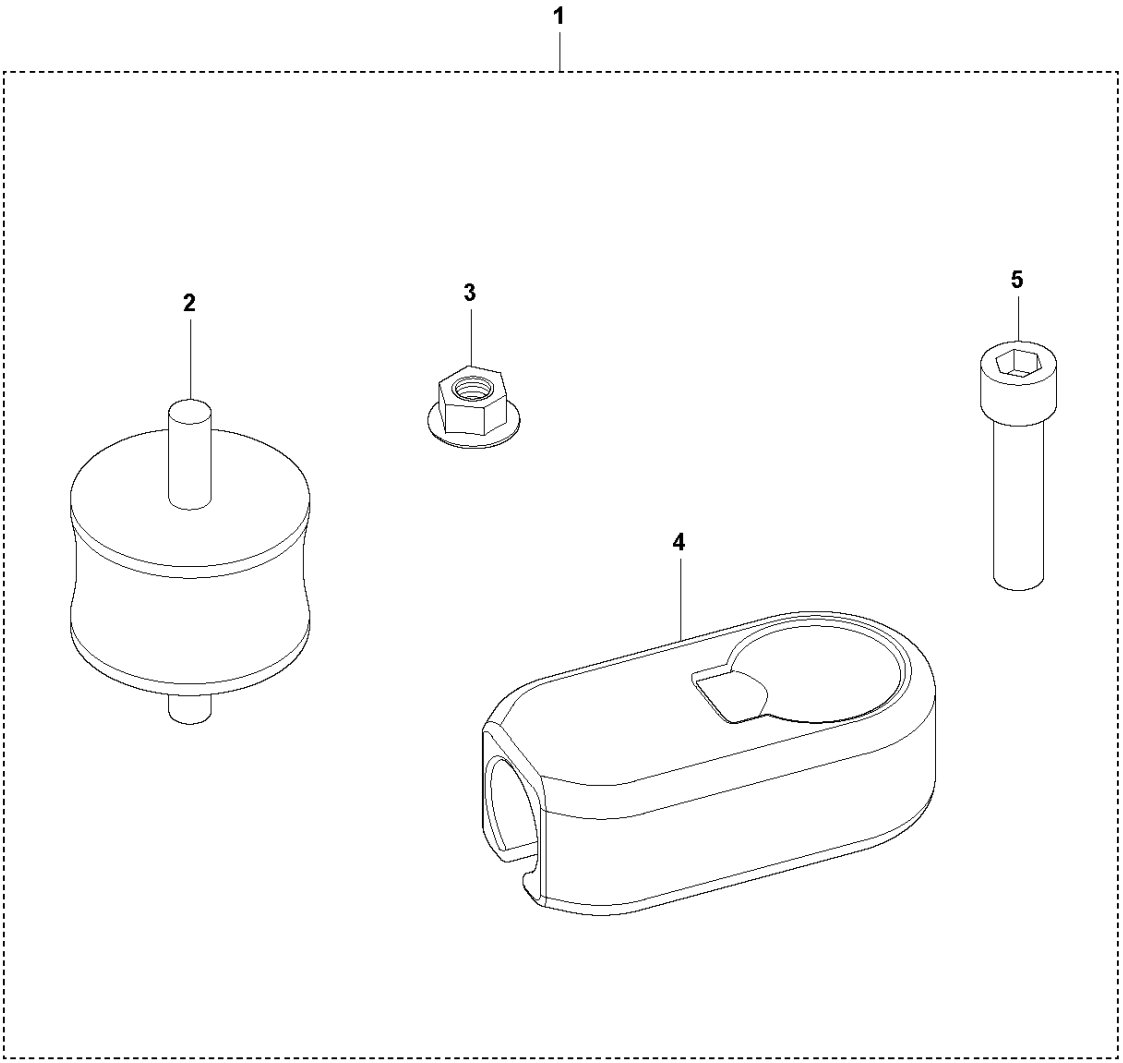

SHOCK ABSORBER REPAIR KIT - HATZ LF 100 L/LF 100 LAT, 967855101, 967855101, 967855102, 967855103, 967855104, 967896801, 2019-08

Ref	Part No	Description	Remark	QTY	KIT
1	594 19 47-01	REPAIR KIT		1	
2	594 34 19-01	ABSORBER		4	1
3	594 12 26-01	HEXAGON NUT	M10 A3K	8	1
4	594 48 04-01	RADIATOR		2	1
5	594 53 00-01	SCREW	M12 x 50 mm 8.8 A3K	2	1

AB LF 100 L / LF 100 LAT ECCENTRIC ELEMENT REPAIR KIT

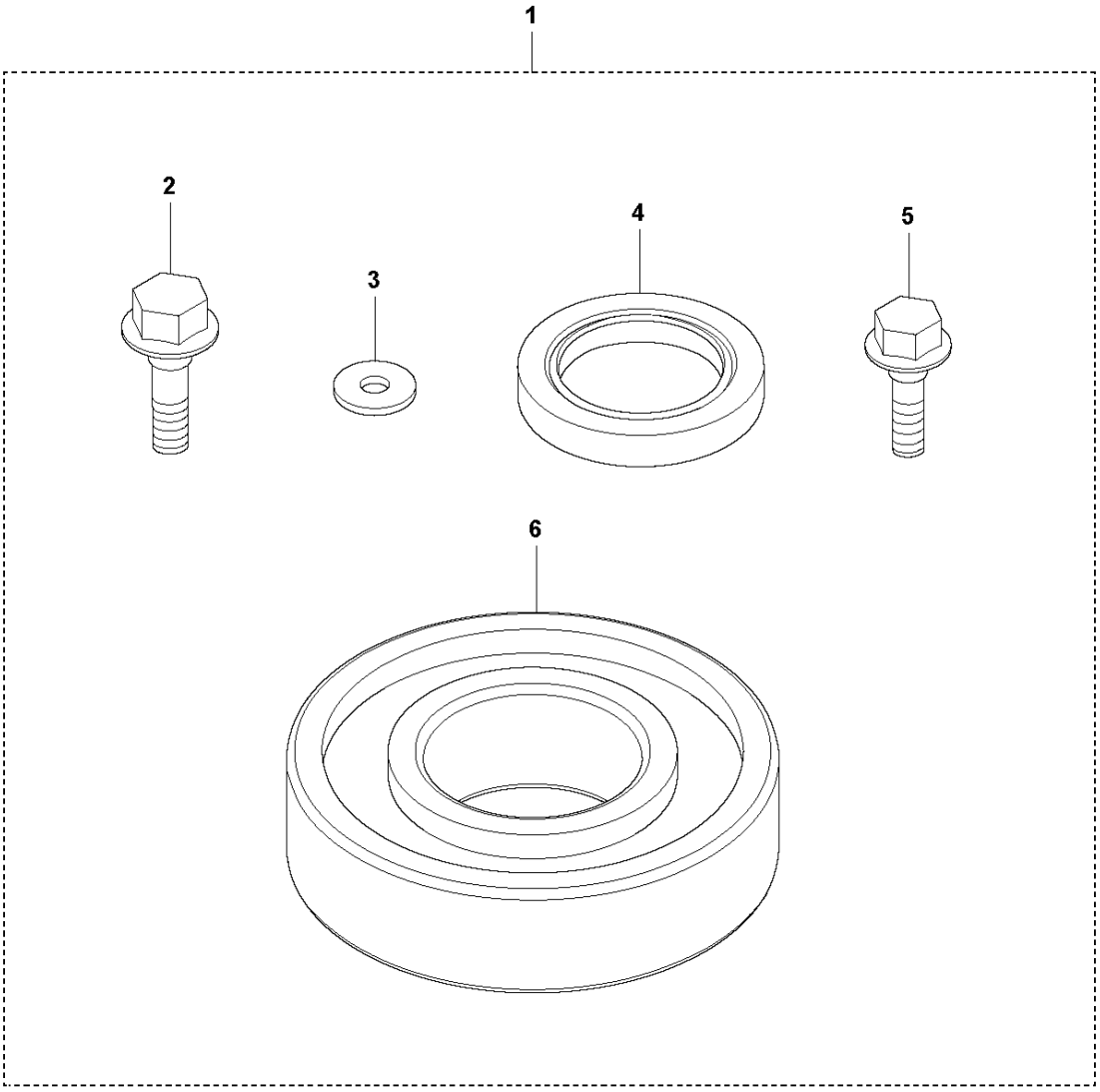

ECCENTRIC ELEMENT REPAIR KIT LF 100 L/LF 100 LAT, 967855101, 967855101, 967855102, 967855103, 967855104, 967896801, 2019-08

Ref	Part No	Description	Remark	QTY	KIT
1	594 19 44-01	REPAIR KIT		1	
2	594 12 00-01	SCREW	M08x025H, 8.8, A2K	1	1
3	594 12 34-01	WASHER	M08 8,4x22x3,0 300 HV	1	1
4	594 12 83-01	SEAL		1	1
5	594 52 33-01	SCREW	M06x16, 8.8, A2K	6	1
6	594 52 61-01	BALL BEARING		2	1

AC LF 100 L GOLD KIT - HONDA

1

1	**595388202**	**Gold Kit LF 100 Honda**	
		Ground Plate and Eccentric System	
2	Eccentric System	Eccentric Element Repair Kit	1
3		V-Belt Pulley	1
4		Screw	6
5		Lock Washer	6
6		Shock absorber repair kit	1
		Cosmetic Kit	
7	Covers	Cover	1
8		Belt guard, outer	1
9		Screw	3
10		Nut	1
11		Screw	3
12		Screw	1
13		Lock Spring	1
14		Washer	3
15		Screw	2
16	Handle	Handle Kit	1
17	Labeling	Product Label Set	1
		Engine	
18	Service Kit	Yearly Service Kit	1

GOLD KIT - HONDA LF 100 L/LF 100 LAT, 967855101, 967855101, 967855102, 967855103, 967855104, 967896801, 2019-08

Ref	Part No	Description	Remark	QTY KIT
1	595 38 82-02	SERVICE KIT	For LF 100 L with Honda engine	1

AD LF 100 L COSMETIC KIT - HONDA

1

1	**595386402**	**Cosmetic Kit**	
2	Covers	Cover	1
3		Belt guard, outer	1
4		Screw	3
5		Nut	1
6		Screw	3
7		Screw	1
8		Lock Spring	1
9		Washer	3
10		Screw	2
11	Handle	Handle Kit	1
12	Labeling	Product Label Set	1

COSMETIC KIT - HONDA LF 100 L/LF 100 LAT, 967855101, 967855101, 967855102, 967855103, 967855104, 967896801, 2019-08

Ref	Part No	Description	Remark	QTY KIT
1	595 38 64-02	SERVICE KIT	For LF 100 L with Honda engine	1

AE LF 100 LAT GOLD KIT - HONDA

1

1	**595388302**	**Gold Kit LF 100 Honda LAT**	
		Ground Plate and Eccentric System	
2	Eccentric System	Eccentric Element Repair Kit	1
3		V-Belt Pulley	1
4		Screw	6
5		Lock Washer	6
6		Shock absorber repair kit	1
		Cosmetic Kit	
7	Covers	Belt guard, outer	1
8		Screw	3
9		Nut	1
10		Screw	3
11		Screw	1
12		Lock Spring	1
13		Washer	3
14		Screw	2
15		Sprinkler Water System	1
16	Handle	Handle Kit	1
17	Labeling	Product Label Set	1
		Engine	
18	Service Kit	Yearly Service Kit	1

GOLD KIT - HONDA LF 100 L/LF 100 LAT, 967855101, 967855101, 967855102, 967855103, 967855104, 967896801, 2019-08

Ref	Part No	Description	Remark	QTY KIT
1	595 38 83-02	SERVICE KIT	For LF 100 LAT version with Honda engine	1

AF LF 100 LAT SILVER KIT - HONDA

1

1	**594764801**	**Silver Kit LF 100 Honda LAT**	
	Ground Plate and Eccentric System		
2	**Eccentric system**	Eccentric Element Repair Kit	1
3		v-Belt Pulley	1
4		Screw	6
5		Lock Washer	6
6		Shock absorber repair kit	1
	Engine		
7	**Service Kit**	Yearly Service Kit	**1**

SILVER KIT - HONDA LF 100 L/LF 100 LAT, 967855101, 967855101, 967855102, 967855103, 967855104, 967896801, 2019-08

Ref	Part No	Description	Remark	QTY KIT
1	594 76 48-01	SERVICE KIT	For LF 100 LAT version with Honda engine	1

AG LF 100 LAT COSMETIC KIT - HONDA

1

1	**594215902**	**Cosmetic Kit**	
2	**Covers**	Belt guard	1
3		Screw	3
4		Nut	1
5		Screw	3
6		Screw	1
7		Lock spring	1
8		Washer	3
9		Screw	2
10		Sprinkler Water System	1
11	**Handle**	Handle Kit	1
12	**Labeling**	Product Lable Set	**1**

COSMETIC KIT - HONDA LF 100 L/LF 100 LAT, 967855101, 967855101, 967855102, 967855103, 967855104, 967896801, 2019-08

Ref	Part No	Description	Remark	QTY KIT
1	594 21 59-02	SERVICE KIT	For LF 100 LAT version with Honda engine	1

AH LF 100 L GOLD KIT - HATZ

1

1	**595388402**	**Gold Kit LF 100 Hatz**	
		Ground Plate and Eccentric System	
2	Eccentric System	Eccentric Element Repair Kit	1
3		V-Belt Pulley	1
4		Screw	6
5		Centrifugal Clutch	1
6		Lock Washer	6
7		Shock absorber repair kit	1
		Cosmetic Kit	
8	Covers	Cover	1
9		Belt guard	1
10		Bolt	2
11		Washer	2
12		Screw	2
13		Lock Spring	2
14		Bolt	1
15		Nut	1
16		Bolt	2
17	Handle	Handle Kit	1
18	Labeling	Product Label Set	1
		Engine	
19	Service Kit	Yearly Service Kit	1

GOLD KIT - HATZ LF 100 L/LF 100 LAT, 967855101, 967855101, 967855102, 967855103, 967855104, 967896801, 2019-08

Ref	Part No	Description	Remark	QTY KIT
1	595 38 84-02	SERVICE KIT	For LF 100 L with Hatz engine	1

AJ LF 100 L COSMETIC KIT - HATZ

1

1	**595133302**	**Cosmetic Kit**	
2	Covers	Cover	1
3		Belt guard	1
4		Bolt	2
5		Washer	2
6		Screw	2
7		Lock Spring	2
8		Bolt	1
9		Nut	1
10		Bolt	2
11	Handle	Handle Kit	1
12	Labeling	Product Label Set	1

COSMETIC KIT - HATZ LF 100 L/LF 100 LAT, 967855101, 967855101, 967855102, 967855103, 967855104, 967896801, 2019-08

Ref	Part No	Description	Remark	QTY KIT
1	595 13 33-02	SERVICE KIT	For LF 100 L with Hatz engine	1

AK LF 100 LAT GOLD KIT - HATZ

1

1	**595133702**	**Gold Kit LF 100 Hatz LAT**	
		Ground Plate and Eccentric System	
2	Eccentric System	Eccentric Element Repair Kit	1
3		V-Belt Pulley	1
4		Centrifugal Clutch	1
5		Screw	
6		Lock Washer	6
7		Shock absorber repair kit	1
		Cosmetic Kit	
8	Covers	Belt guard	1
9		Bolt	2
10		Washer	2
11		Screw	2
12		Lock Spring	2
13		Bolt	1
14		Nut	1
15		Bolt	2
16		Sprinkler Water System	1
17	Handle	Handle Kit	1
18	Labeling	Product Label Set	1
		Engine	
19	Service Kit	Yearly Service Kit	1

GOLD KIT - HATZ LF 100 L/LF 100 LAT, 967855101, 967855101, 967855102, 967855103, 967855104, 967896801, 2019-08

Ref	Part No	Description	Remark	QTY KIT
1	595 13 37-02	SERVICE KIT	For LF 100 LAT version with Hatz engine	1

AL

LF 100 LAT
SILVER KIT - HATZ

1

1	**594219301**	**Silver Kit LF 100 Hatz**	
	Ground Plate and Eccentric System		
2	**Eccentric system**	Eccentric Element Repair Kit	1
3		v-Belt Pulley	1
4		Screw	6
5		Lock Washer	6
6		Shock absorber repair kit	1
	Engine		
7	**Service Kit**	Yearly Service Kit	**1**

SILVER KIT - HATZ LF 100 L/LF 100 LAT, 967855101, 967855101, 967855102, 967855103, 967855104, 967896801, 2019-08

Ref	Part No	Description	Remark	QTY KIT
1	594 21 93-01	ENGINE	For LF 100 LAT version with Hatz engine	1

AM LF 100 LAT COSMETIC KIT - HATZ

1

1	**594214402**	**Cosmetic Kit**	
2	**Covers**	Belt guard	1
3		Bolt	2
4		Washer	2
5		Screw	2
6		Lock Spring	2
7		Bolt	1
8		Nut	1
9		Bolt	2
10		Sprinkler Water System	1
11	**Handle**	Handle Kit	1
12	**Labeling**	Product Lable Set	**1**

COSMETIC KIT - HATZ LF 100 L/LF 100 LAT, 967855101, 967855101, 967855102, 967855103, 967855104, 967896801, 2019-08

Ref	Part No	Description	Remark	QTY KIT
1	594 21 44-02	SERVICE KIT	For LF 100 LAT version with Hatz engine	1

AN LF 100 L / LF 100 LAT DECALS

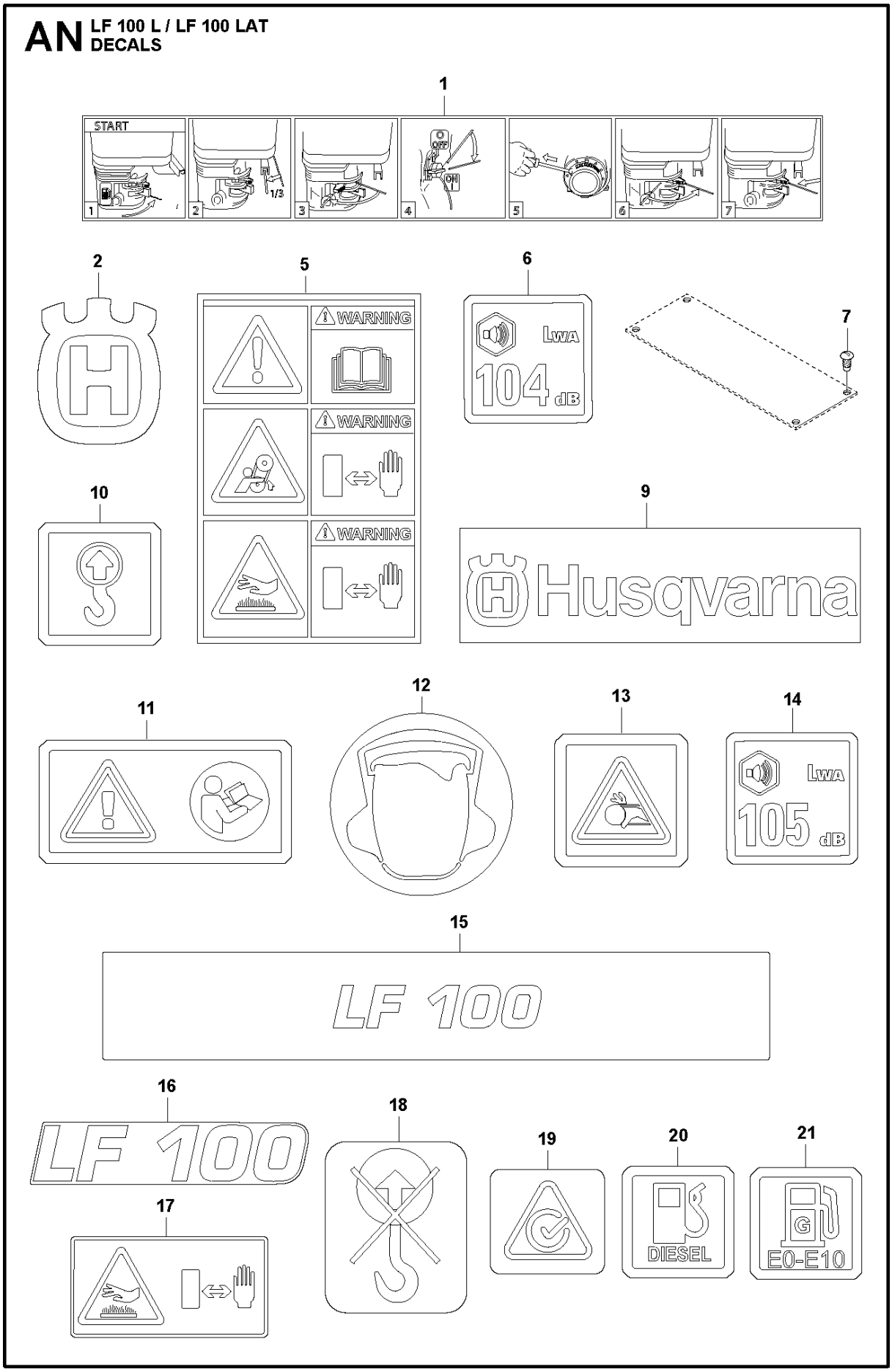

DECALS LF 100 L/LF 100 LAT, 967855101, 967855101, 967855102, 967855103, 967855104, 967896801, 2019-08

Ref	Part No	Description	Remark	QTY KIT
1	594 48 62-01	DECAL		1
2	574 38 21-01	DECAL		1
5	594 48 63-01	DECAL		1
6	595 51 32-02	LABEL		1
7	595 18 02-01	SCREW		4
9	595 09 42-01	DECAL	logo Husqvarna	1
10	594 66 09-01	LABEL		2
11	594 86 97-01	LABEL	Hatz version	1
12	594 65 96-01	LABEL	Hatz version	1
13	594 66 08-01	LABEL	Hatz version	1
14	594 51 56-01	DECAL	decal level noise 105Db	1
15	595 09 48-01	DECAL	brand decal LF100 (HV colors 158,4x24,4mm)	1
16	595 90 06-01	DECAL	brand decal LF100	1
17	595 18 61-01	DECAL	Hot surface	1
18	594 48 33-01	DECAL		1
19	596 28 02-01	DECAL	DECAL Complience	1
20	594 66 16-01	LABEL	decal diesel - Hatz	1
21	594 66 02-01	LABEL	decal gasoline - Honda	1