1

TERRA-HAMMER T 135 S

Exploded drawing and part number

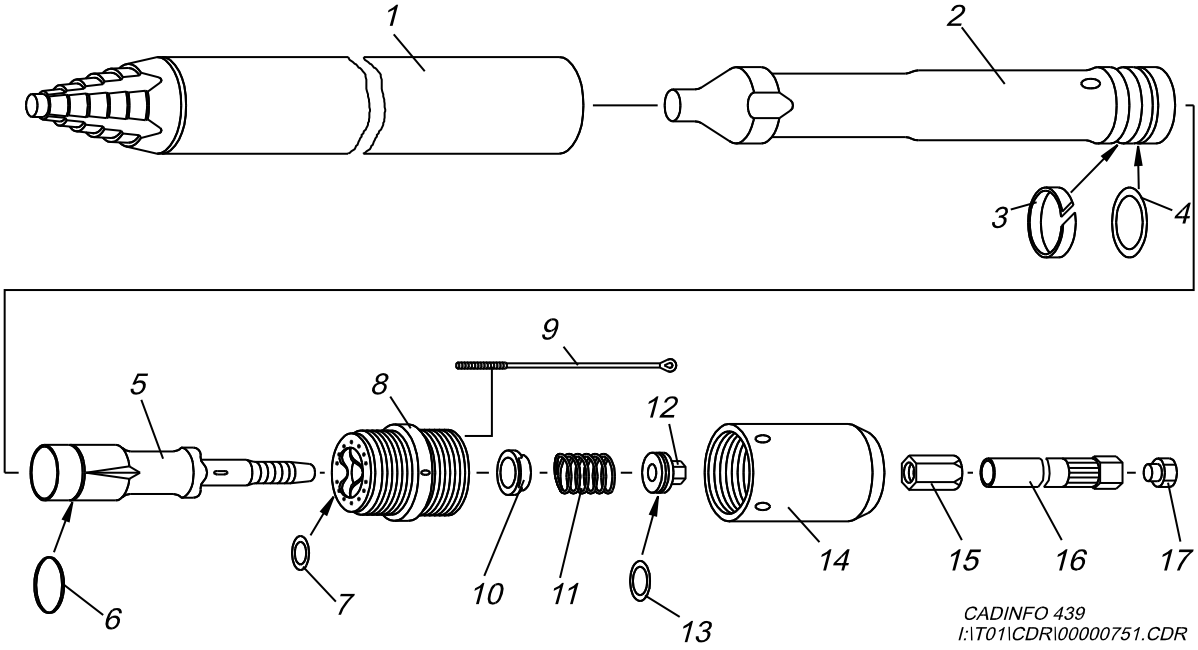

1	=	2135.1212.01	body with blunt combi head (KOK) (T 135 S/F)
2	=	2130.1202.00	main piston /striker (130 + 135)
3	=	2130.1203.00	sliding collar (337 x 25 x 2.5 mm)
4	=	2130.1204.00	main piston (striker) O-ring
5	=	2135.1401.01	control piston/valve (TU 135 S), for 4.0 mm wide valve ring
6	=	2135.1409.01	control piston(valve ring ø 78 mm, 4.0 mm wide, white, PTFE/glass, for TU 135 S/F
7	=	2135.1444.03	OMEGAT seal for end cap (T/TU 135 S)
8	=	2135.1403.01	end cap (T/TU 135 S), for OMEGAT seal, with fine threads for end adapters
9	=	2130.1930.01	pulling cable D 8 mm, 400 mm long, c/w eyelet and threads M12 for T/TU 135 S (from June 1991)
10	=	2135.1419.02	positive directional washer, type II, (T/TU 135 S)
11	=	2135.1418.03	control piston (valve) spring, red, for T/TU 135 S
12	=	2135.1417.03	pressure plate nut, type II, for OMEGAT seal
13	=	2135.1445.03	OMEGAT seal for pressure plate nut T/TU 135 S
14	=	2135.1406.01	end sleeve A-135-114, threaded for T/TU 135 S
15	=	3125.1905.00	hose nut, “golden”, M30 x 2.0 mm
16	=	2135.1900.10	short whip hose DN 25 mm (1”), 1 m long, wire braided 2 ST, c/w female JIC coupling, w/o hose nut
17	=	2135.1935.10	coupling cap (for short whip hose ID 25 mm/1”)